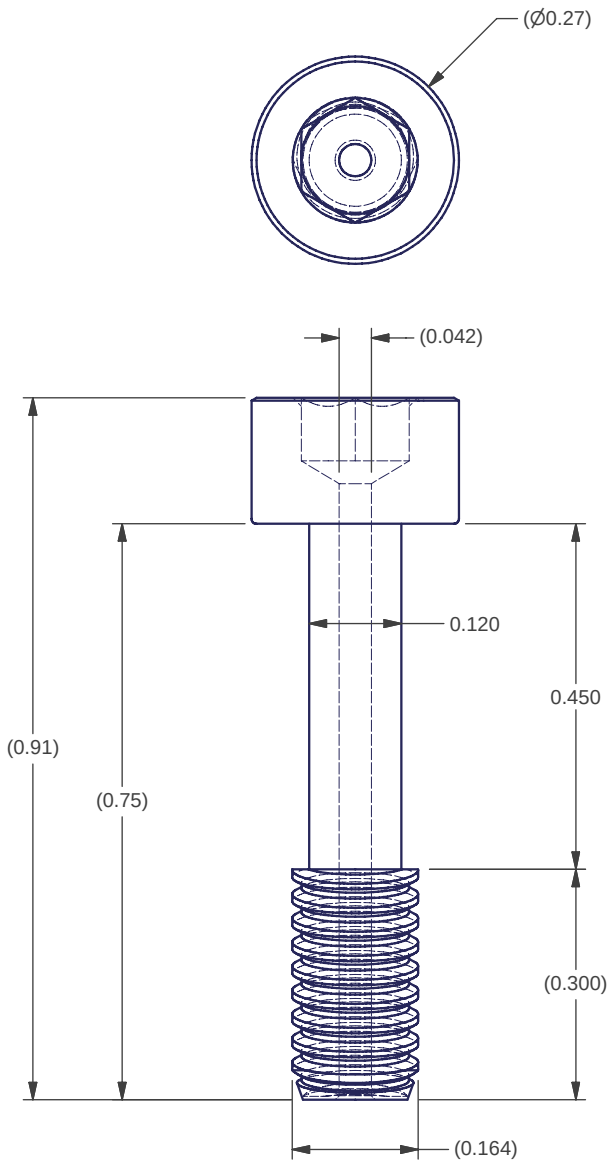

Click here to see a 3D solid model

NOTES:

1. MATERIAL: 18-8 SSTL, MAKE FROM McMaster 93235A197 VENTED SCREW

2. FINISH: NONE

SCALE 4 : 1

REV	CHANGES	DATE	BY
A	Production	1/14/2007	ERK

MATERIAL: 1

FINISH: 2

SCALE: As Noted

UNLESS OTHERWISE SPECIFIED:
DIMENSIONS ARE IN INCHES
BRAKE EDGES / REMOVE BURRS

TOLERANCES:
X.X± 0.1 ANGLES:0.5°
X.XX± 0.03 FRACTIONS:± 1/16
X.XXX± 0.010

DO NOT SCALE DRAWING

****
FourStar

FS-00-001	Detector System		
NEXT ASSY	USED ON		
APPLICATION			
Designer: Persson	2/13/2006		
Drawn: Koch	2/13/2006	Drawings Printed on:	1/14/2007

THE OBSERVATORIES

CARNEGIE INSTITUTION OF WASHINGTON
813 SANTA BARBARA STREET PASADENA, CA. 91101-1232

SHCS 8-32 x 0.75 VENTED CAPTIVE

DWG NO. **FS-10-003**

REV. **A**

SHT 1 OF 1