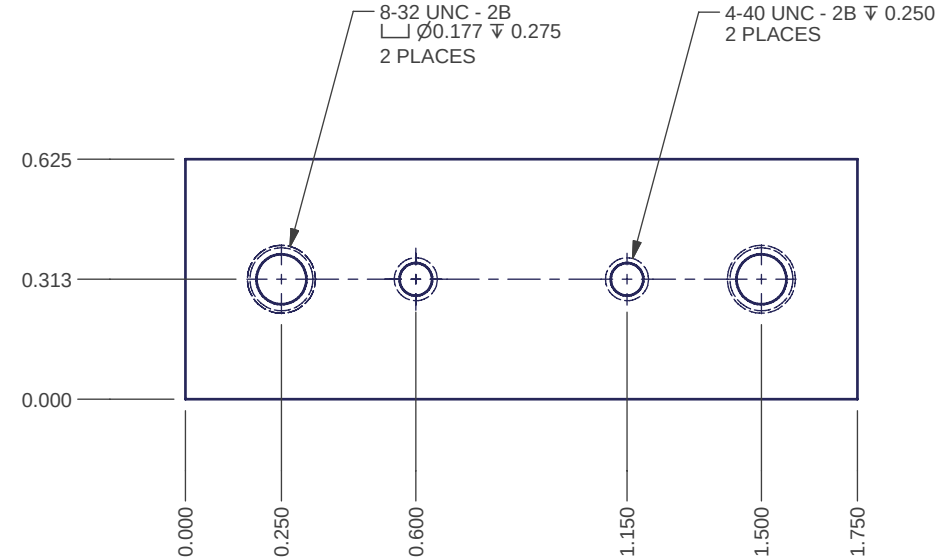

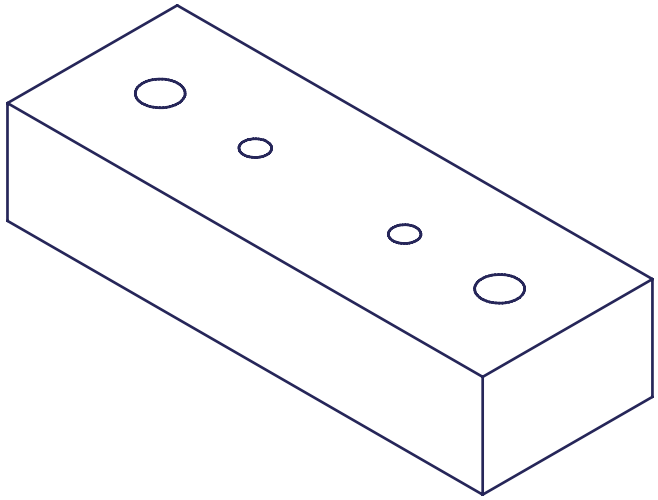

Click here to see a 3D solid model

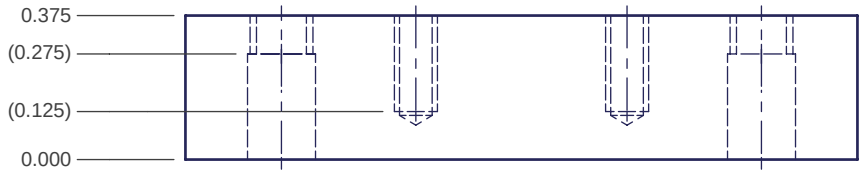

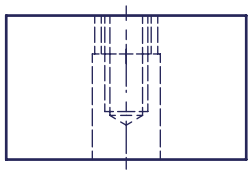

SCALE 2 : 1

NOTES:

1. MATERIAL: ALUMINUM 6061
2. FINISH: NONE
3. QUANTITY REQ'D: 4

Click here to get SAT file

REV	CHANGES	DATE	BY
A	Production	5/4/2004	ERK

MATERIAL: 1

FINISH: 2

SCALE: AS NOTED

UNLESS OTHERWISE SPECIFIED:
DIMENSIONS ARE IN INCHES
BRAKE EDGES / REMOVE BURRS

TOLERANCES:
X.X± 0.1 ANGLES:0.5°
X.XX± 0.03 FRACTIONS:± 1/16
X.XXX± 0.010

DO NOT SCALE DRAWING

****
FourStar

FS-01-001	DETECTOR		
NEXT ASSY	USED ON		
APPLICATION			
Designer: Persson	5/4/2004		
Drawn: Koch	5/4/2004	Drawings Printed on:	5/4/2004

THE OBSERVATORIES

CARNEGIE INSTITUTION OF WASHINGTON
813 SANTA BARBARA STREET PASADENA, CA. 91101-1232

HEAT SINK 1, BASE PLATE

DWG NO. **FS-11-001**

REV. **A**

SHT 1 OF 1