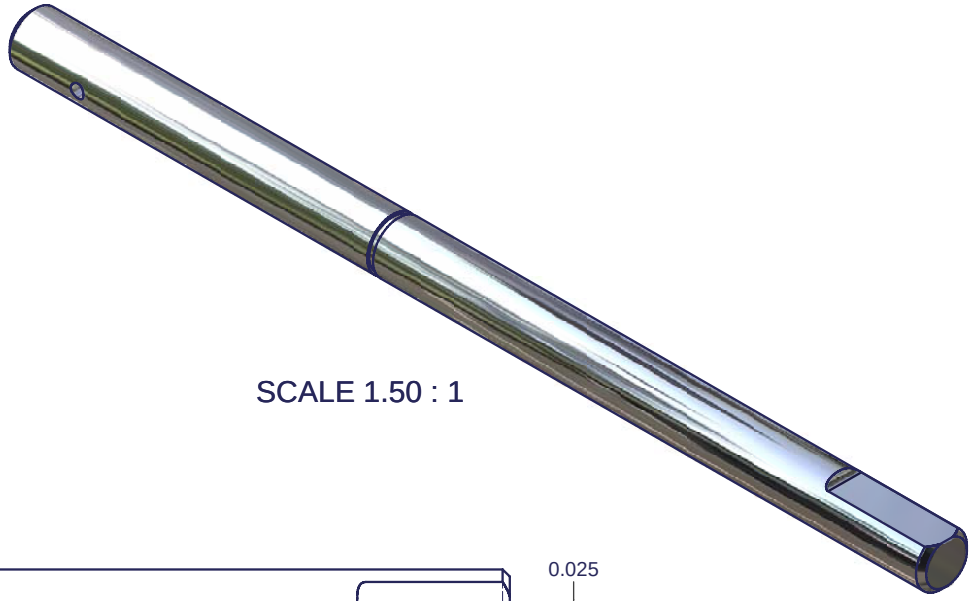

SCALE 1.50 : 1

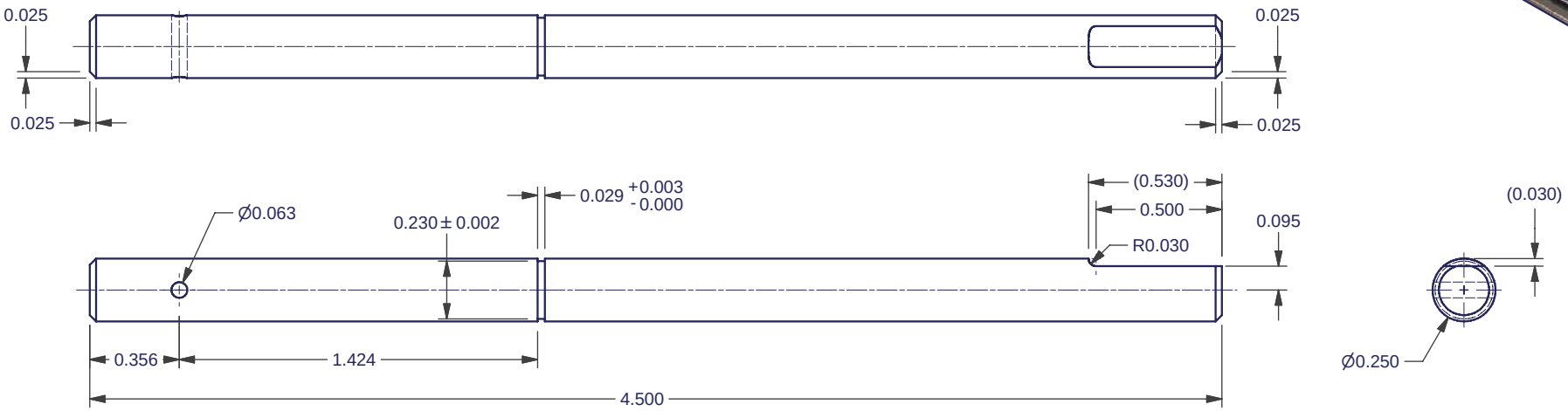

SCALE 1.50 : 1

NOTES:

1 MATERIAL: 0.250 SSTL STOCK
PIC A3-45 OR EQUIVALENT

2 FINISH: NONE

3 QTY REQ'D: 1

REV	CHANGES	DATE	BY
A	Production	3/11/2007	ERK

MATERIAL: 1

FINISH: 2

SCALE: As Noted

UNLESS OTHERWISE SPECIFIED:
DIMENSIONS ARE IN INCHES
BRAKE EDGES / REMOVE BURRS

TOLERANCES:
X.X± 0.1 ANGLES:0.5°
X.XX± 0.01 FRACTIONS:± 1/16
X.XXX± 0.003

DO NOT SCALE DRAWING

**** FourStar

FS-02-002	FFW		
NEXT ASSY	USED ON		
APPLICATION			
Designer: Persson	11/3/2004		
Drawn: Koch	3/11/2007	Drawings Printed on:	3/12/2007

THE OBSERVATORIES

CARNEGIE INSTITUTION OF WASHINGTON
813 SANTA BARBARA STREET PASADENA, CA. 91101-1232

SHAFT,0.25x4.50,BEVEL GEAR

DWG NO. **FS-13-004**

REV. **A**

SHT 1 OF 1