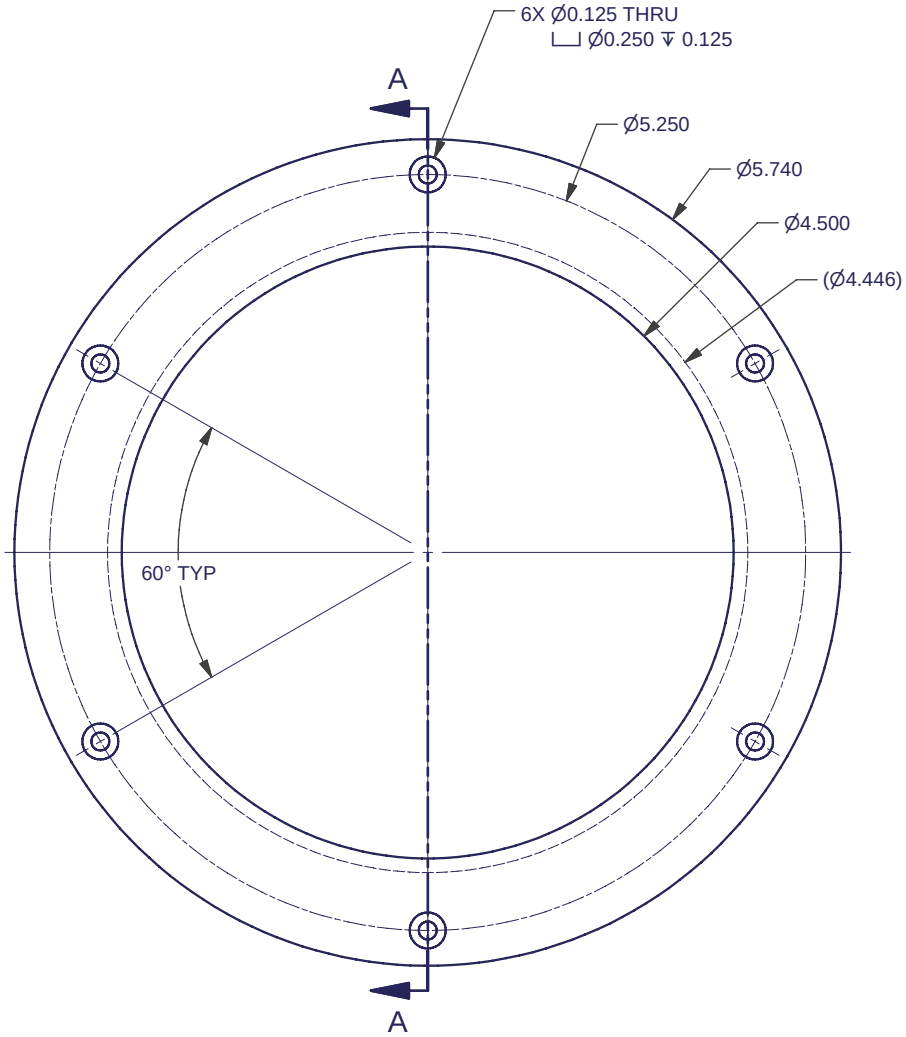

SCALE 3 / 4

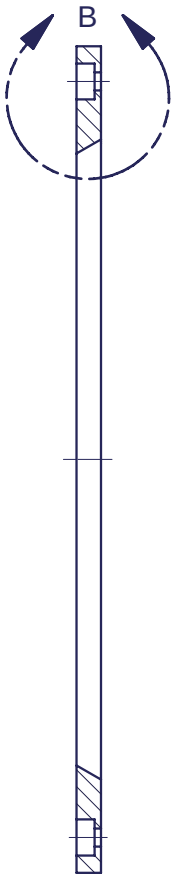

SECTION A-A
SCALE 3 / 4

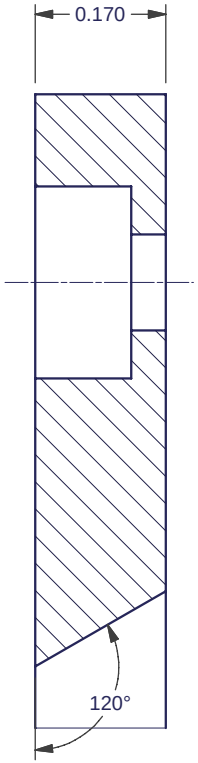

DETAIL B
SCALE 4 : 1

Click here to see a 3D solid model

NOTES:

1 MATERIAL: AL. 6061-T6

2 FINISH: NONE

3 QTY REQ'D: 4

Click here to get SAT file

REV	CHANGES	DATE	BY
NR	Check Print	4/24/2007	ERK
NR1	Bolt circle	8/20/2007	ERK
A	Production	10/21/2007	ERK

MATERIAL: 1

FINISH: 2

SCALE: As Noted

UNLESS OTHERWISE SPECIFIED:
DIMENSIONS ARE IN INCHES
BRAKE EDGES / REMOVE BURRS
TOLERANCES:
X.X± 0.1 ANGLES:0.5°
X.XX± 0.01 FRACTIONS:± 1/16
X.XXX± 0.003
DO NOT SCALE DRAWING

**** FourStar

FS-03-003	FFW		
NEXT ASSY	USED ON		
APPLICATION			
Designer: Persson	8/18/2005		
Drawn: Koch	4/24/2007	Drawings Printed on:	10/21/2007

THE OBSERVATORIES

CARNEGIE INSTITUTION OF WASHINGTON
813 SANTA BARBARA STREET PASADENA, CA. 91101-1232

COVER, LENS LOCK

DWG NO. **FS-13-011**

REV. **A**

SHT 1 OF 1