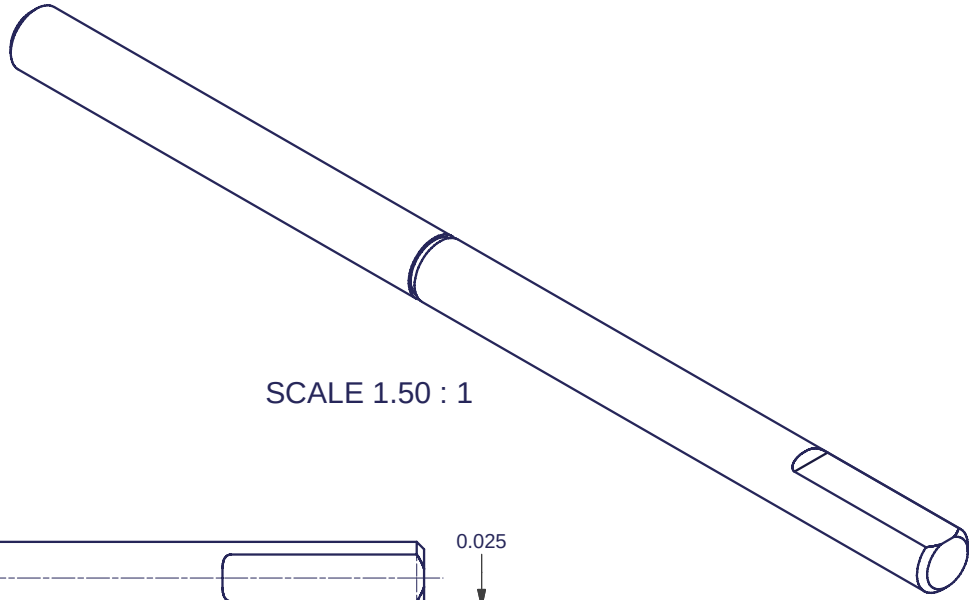

SCALE 1.50 : 1

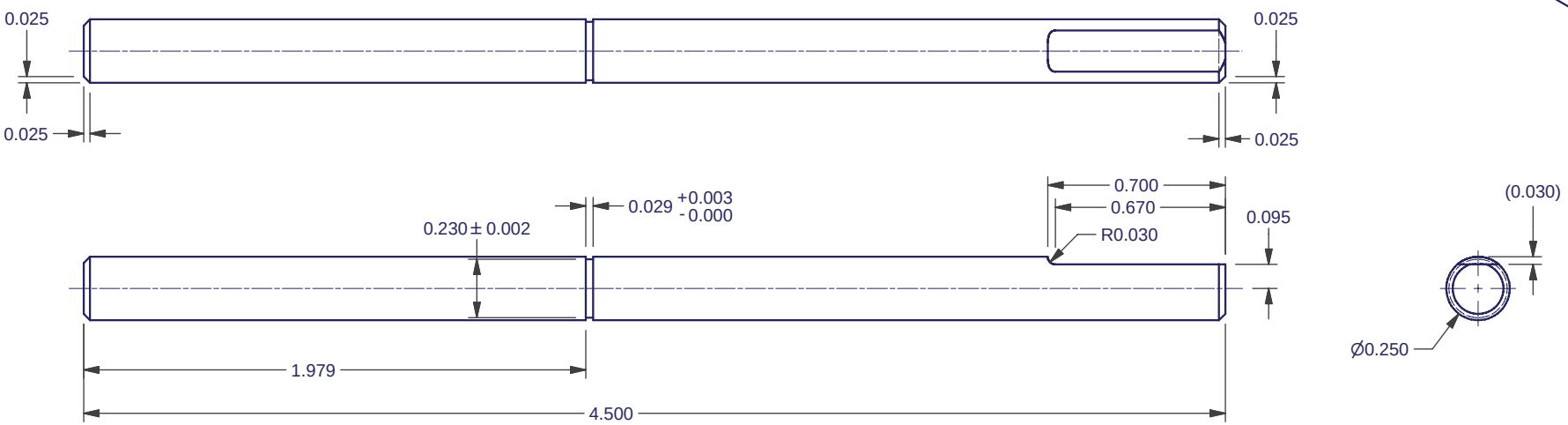

SCALE 1.50 : 1

NOTES:

1. MATERIAL: 0.250 SSTL STOCK
   PIC A3-45 OR EQUIVALENT
2. FINISH: NONE
3. QTY REQ'D: 1

REV	CHANGES	DATE	BY
A	Production	6/11/2007	ERK

MATERIAL: 1

FINISH: 2

SCALE: As Noted

UNLESS OTHERWISE SPECIFIED:
DIMENSIONS ARE IN INCHES
BRAKE EDGES / REMOVE BURRS

TOLERANCES:
X.X± 0.1 ANGLES:0.5°
X.XX± 0.01 FRACTIONS:± 1/16
X.XXX± 0.003

DO NOT SCALE DRAWING

**** FourStar

FS-04-002	Filter Wheel System		
NEXT ASSY	USED ON		
APPLICATION			
Designer: Persson	11/3/2004		
Drawn: Koch	6/11/2007	Drawings Printed on:	6/11/2007

THE OBSERVATORIES

CARNEGIE INSTITUTION OF WASHINGTON
813 SANTA BARBARA STREET PASADENA, CA. 91101-1232

SHAFT,0.250x4.5,INPUT TOP FW

DWG NO. **FS-14-004**

REV. **A**

SHT 1 OF 1