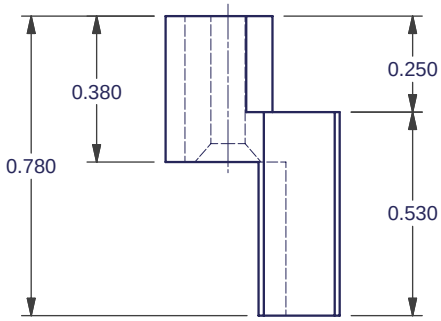

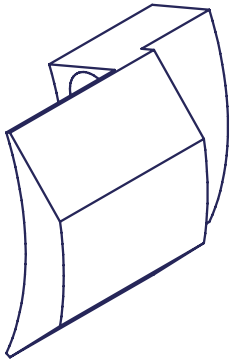

SCALE 2 : 1

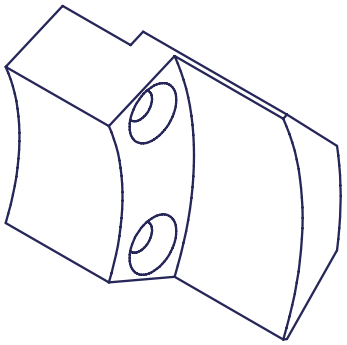

SCALE 2 : 1

Click here to see a 3D solid model

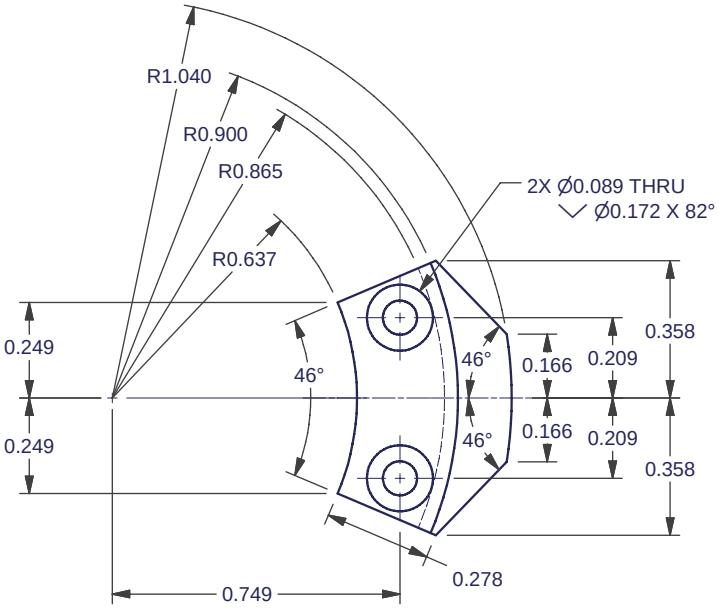

SCALE 2 : 1

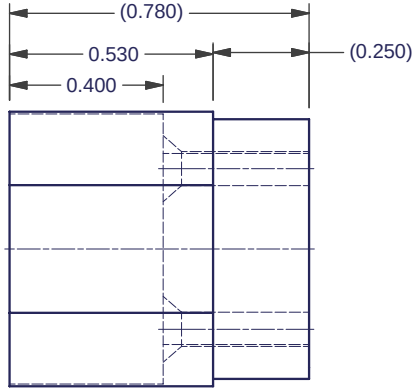

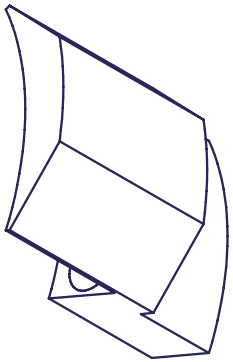

SCALE 2 : 1

NOTES:

1. MATERIAL: AL. 6061-T6
2. FINISH: NONE
3. QTY REQ'D: 1

Click here to get SAT file

REV	CHANGES	DATE	BY
A	Production	2/4/2008	ERK

MATERIAL: 1

FINISH: 2

SCALE: As Noted

UNLESS OTHERWISE SPECIFIED:
DIMENSIONS ARE IN INCHES
BRAKE EDGES / REMOVE BURRS

TOLERANCES:
X.X± 0.03 ANGLES:0.5°
X.XX± 0.01 FRACTIONS:± 1/16
X.XXX± 0.003

DO NOT SCALE DRAWING

****
FourStar

FS-04-003	Bottom Filter Wheel		
NEXT ASSY	USED ON		
APPLICATION			
Designer: Persson	5/20/2006		
Drawn: Koch	2/4/2008	Drawings Printed on:	

THE OBSERVATORIES

CARNEGIE INSTITUTION OF WASHINGTON
813 SANTA BARBARA STREET PASADENA, CA. 91101-1232

BRACKET,BOTTOM FW POSITION ENCODER

DWG NO. **FS-14-028**

REV. **A**

SHT 1 OF 1