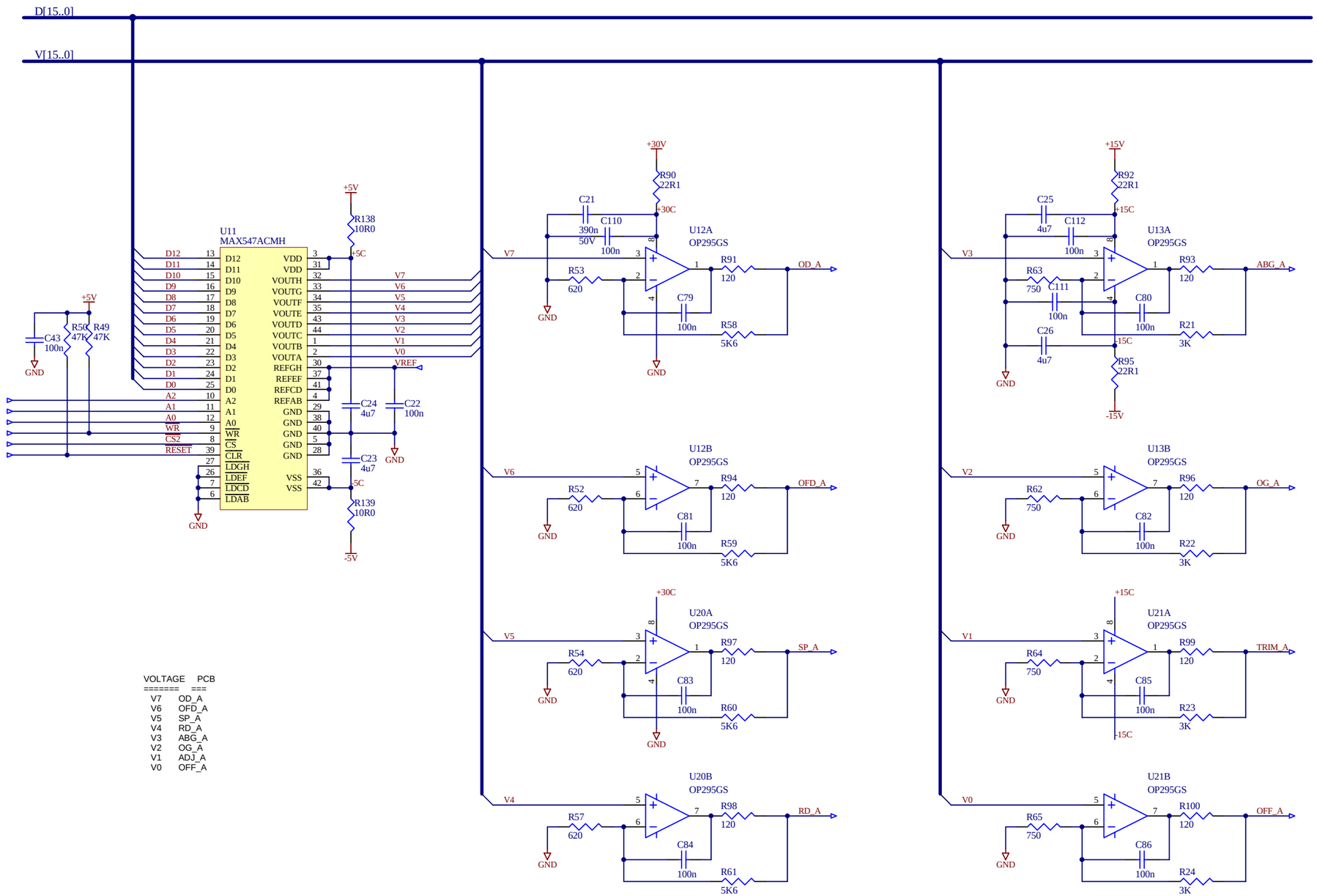

VOLTAGE	PCB
V7	OD_A
V6	OFD_A
V5	SP_A
V4	RD_A
V3	ABG_A
V2	OG_A
V1	ADJ_A
V0	OFF_A

Title **BASE SIGNAL PROCESSING PCB**		*OCIW* *813 Santa Barbara Street* *Pasadena, CA 91101* *www.ociw.edu*
Revision: 3.0a	Date: 1/11/2011	
Sheet 3 of 5	File: G:\pcb\base\sig_proc_v3\sigC.SchDoc	