DC COUPLED PREAMP
DIFFERENTIAL OUTPUT

GAIN = 1 + 2(RF/RG)

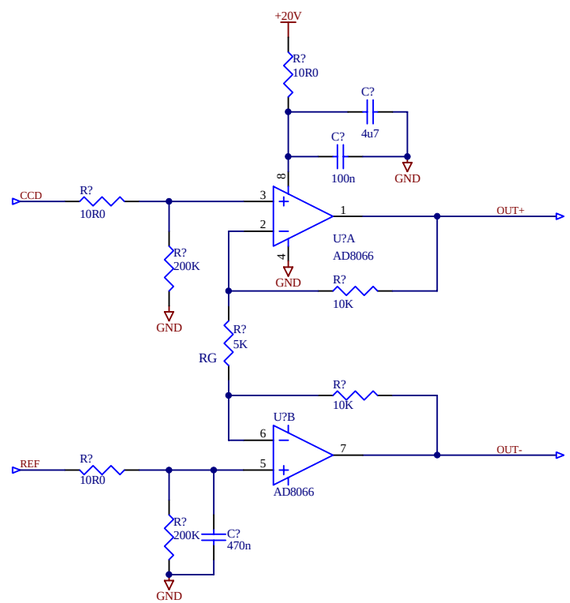

Title ***DIFFERENTIAL PREAMP***		*OCIW* *813 Santa Barbara Street* *Pasadena, CA 91101* *www.ociw.edu*
Revision: 0	Date: 7/11/2009	
Sheet 1 of 1	File: G:\pcb\base\misc\diff_preamp.SchDoc	