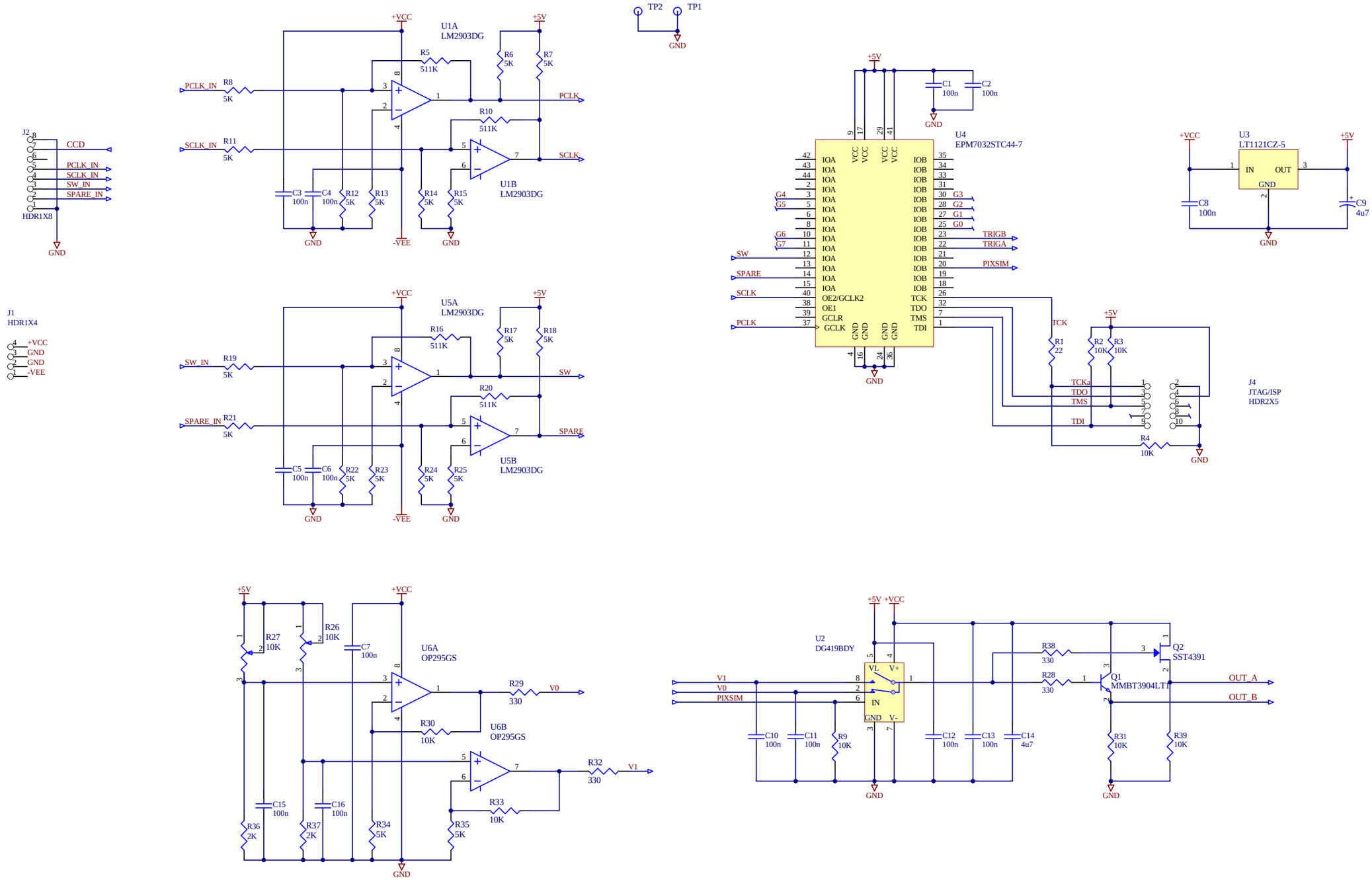

Title		
CCD SIMULATOR		*OCIW* *813 Santa Barbara Street* *Pasadena, CA 91101* *www.ociw.edu*
Revision: 1.0	Date: 9/13/2007	
Sheet 1 of 1	File: C:\base\ccdsim_v1\ccdsim.SchDoc	