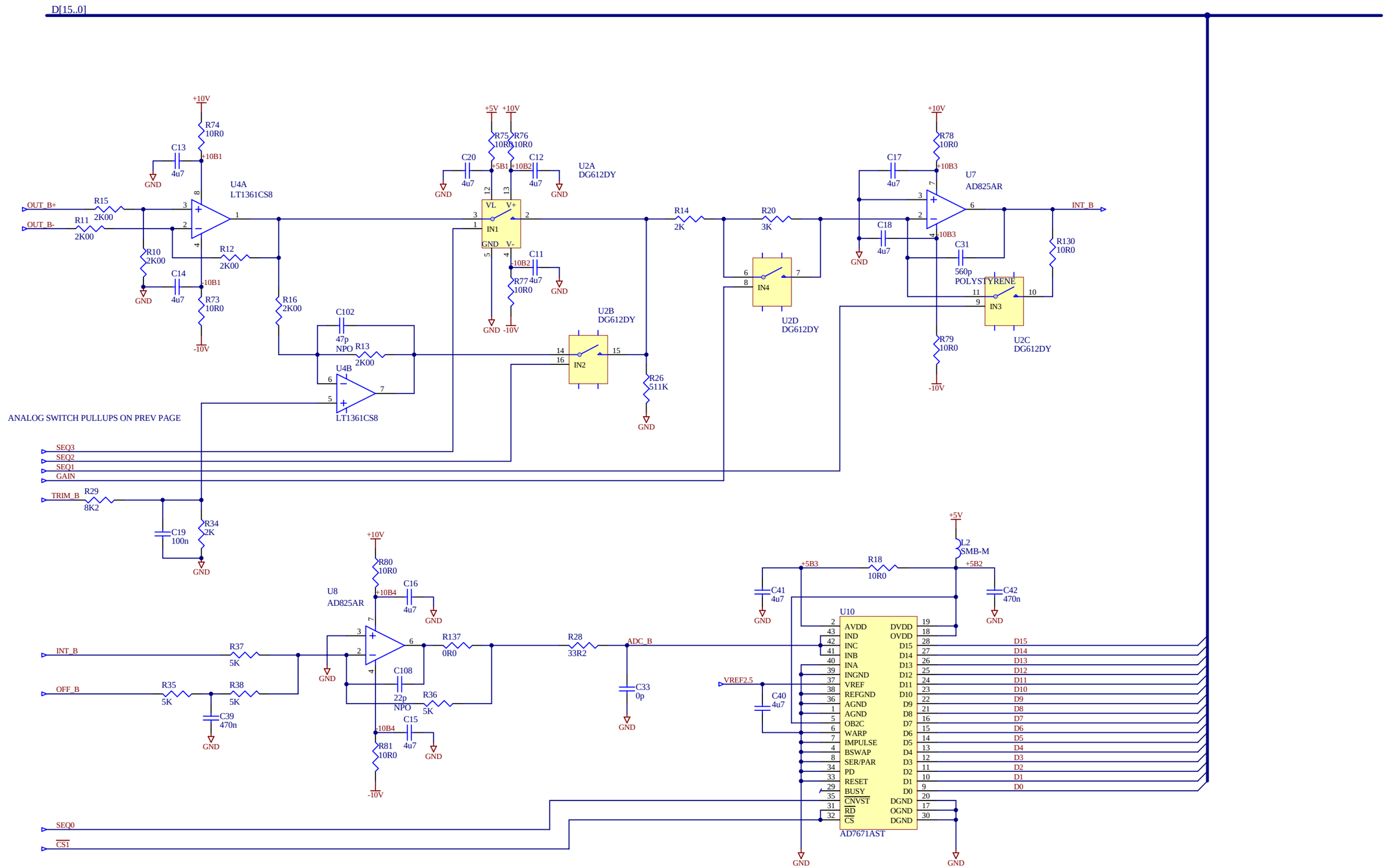

Title **BASE SIGNAL PROCESSING PCB**		*OCIW* *813 Santa Barbara Street* *Pasadena, CA 91101* *www.ociw.edu*
Revision: 3.0a	Date: 1/11/2011	
Sheet 2 of 5	File: G:\pcb\base\sig_proc_v3\sigB.SchDoc	