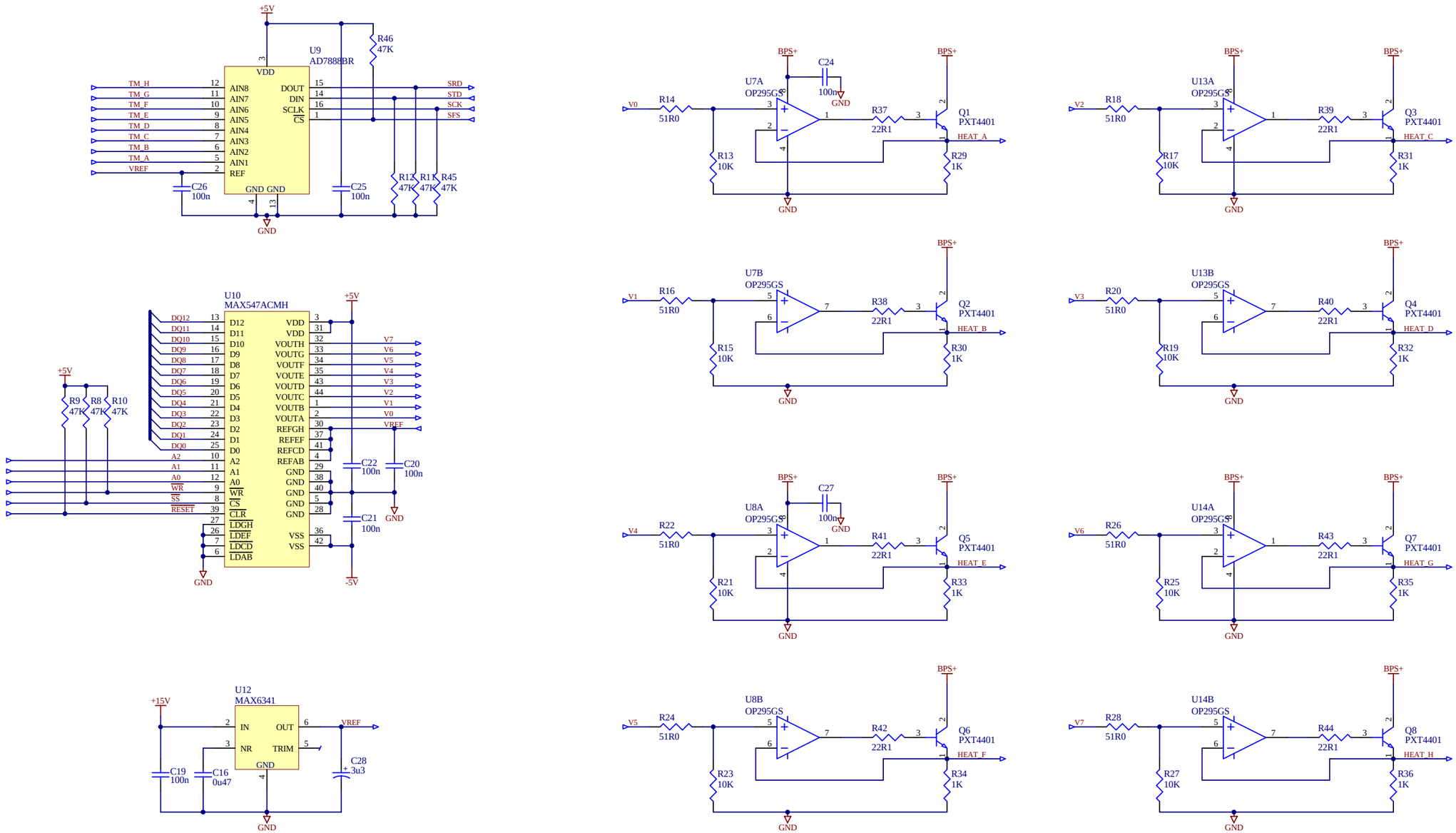

Title **BASE POWER/UTILITY PCB**			*OCIW* *813 Santa Barbara Street* *Pasadena, CA 91101* *www.ociw.edu*
Revision: 3.0a		Date: 1/11/2011	
Sheet 2 of 2		File: G:\pcb\base\power_v3.1\powerB.SchDoc	