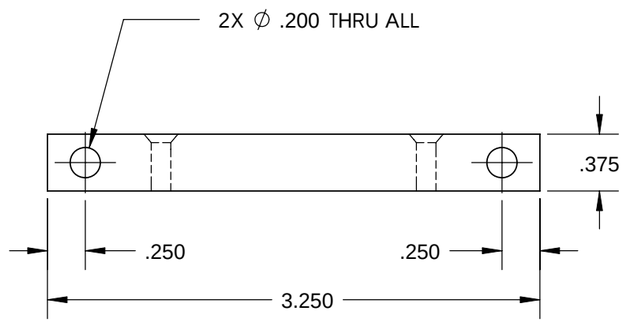

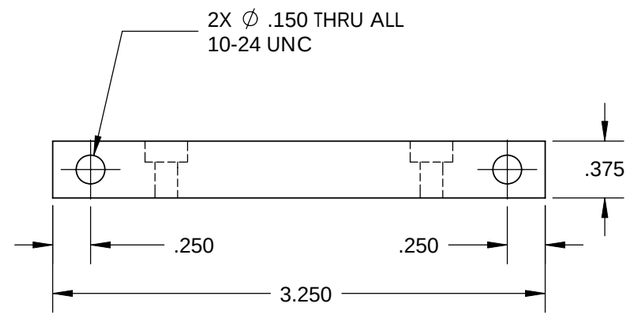

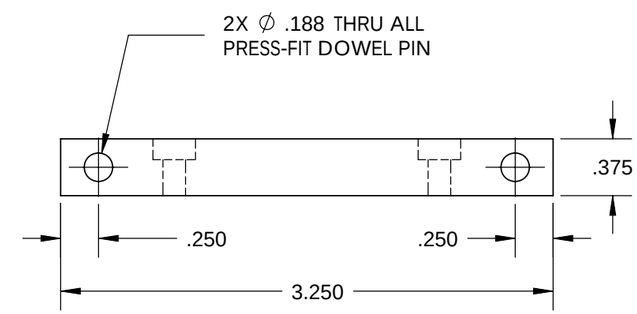

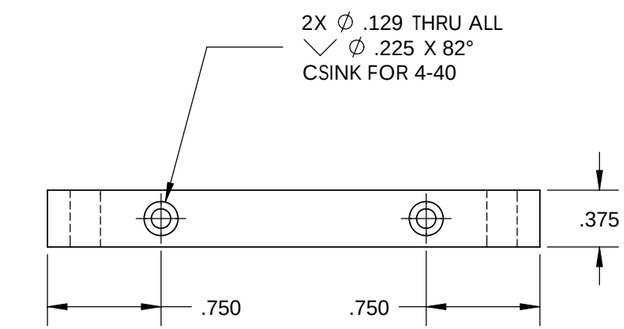

PART A

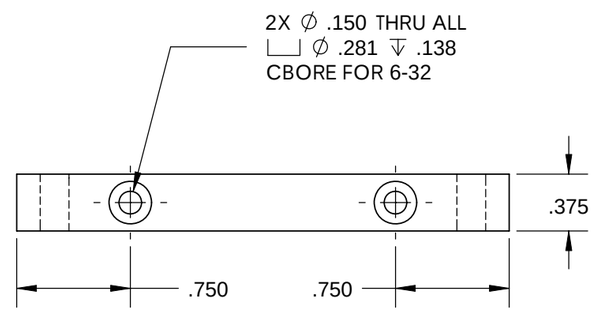

PART B

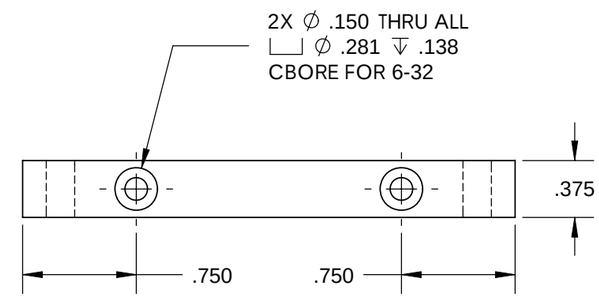

PART C

UNLESS OTHERWISE SPECIFIED:	OBSERVATORIES OF THE CARNEGIE INSTITUTION OF WASHINGTON 813 Santa Barbara Street, Pasadena, CA 91101		
DIMENSIONS ARE IN INCHES TOLERANCES ANGULAR ± 0.5 deg X.XX ±0.03 X.XXX ±0.010	PROJECT E-BOX 5-SLOT		
	TITLE Dewar Bracket		
MATERIAL 6061 Alloy			
FINISH Allodyne	AUTHOR Burley/Thompson	PART	REV B
DO NOT SCALE DRAWING	DATE 1/7/2010	SCALE: 1:2	SHEET 1 OF 1