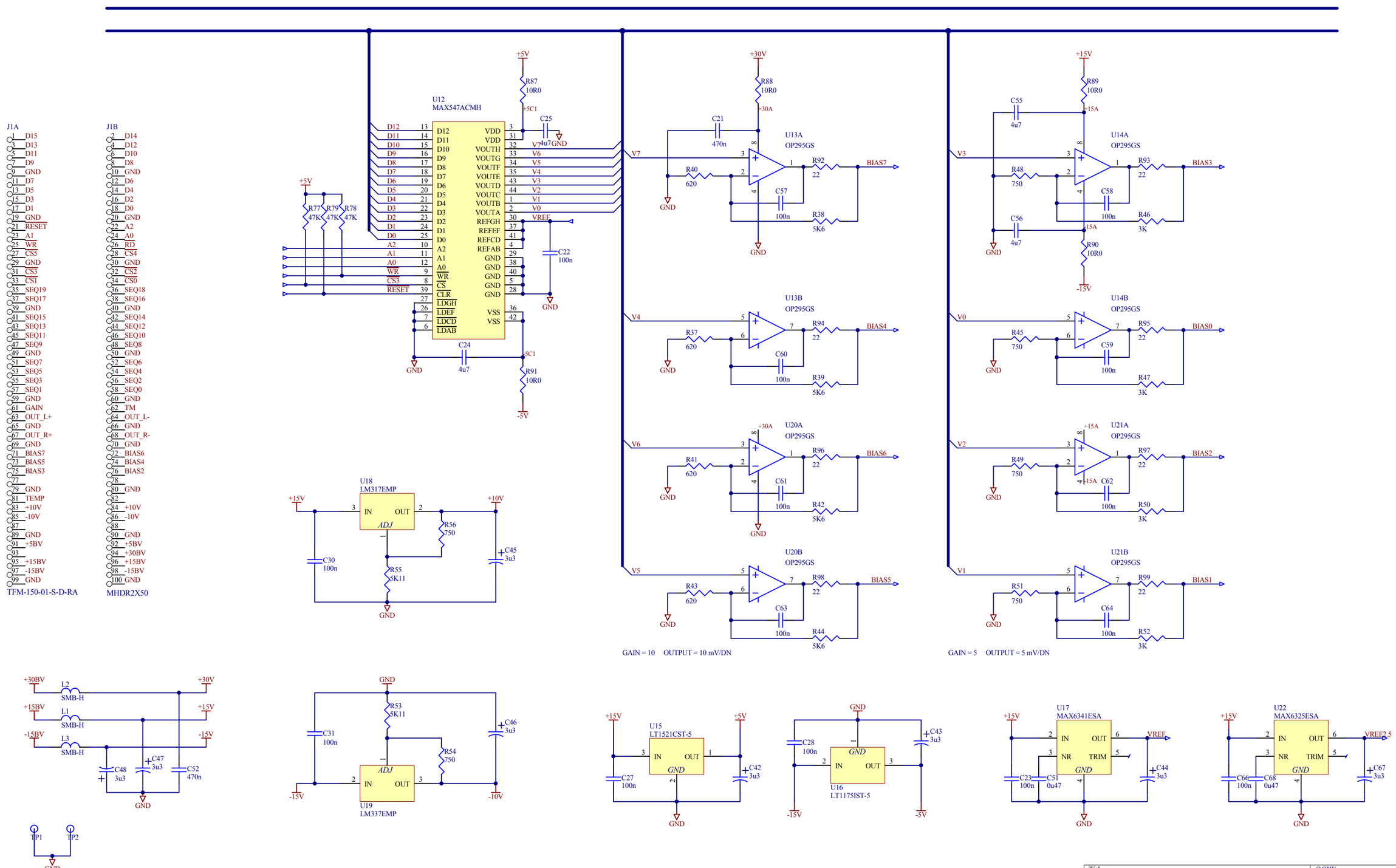


| | | | |
|---|---|---|---|
| Title | GUIDER CAMERA SIGNAL PROCESSING PCB | | OCIW 813 Santa Barbara Street Pasadena, CA 91101 www.ociw.edu |
| Revision: | 2.0 | Date: 7/6/2005 | |
| Sheet 3 of 3 | | File: C:\gcam\sig_proc_v2\sigC.SchDoc | |