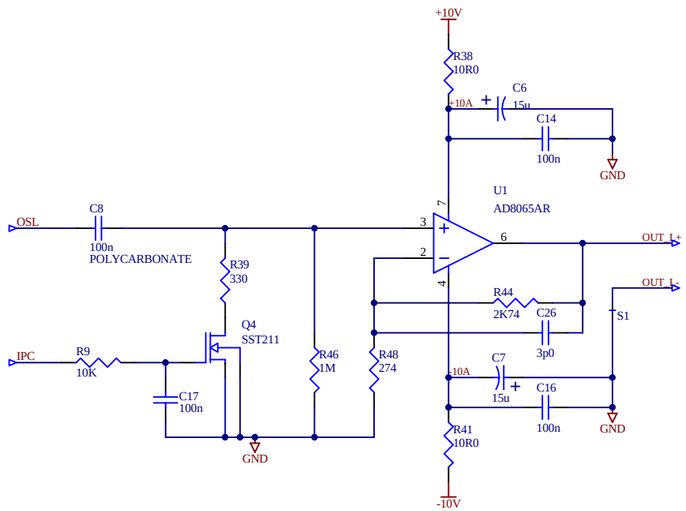

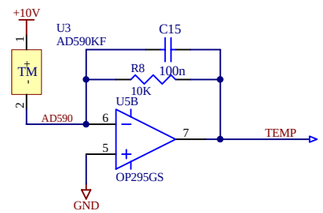

AD590KF 1uA/K TEMPERATURE TRANSDUCER
OUTPUT = 10mV/K

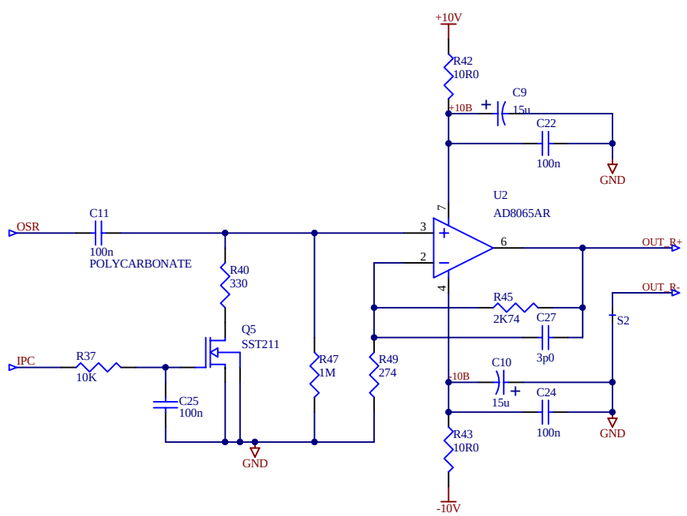

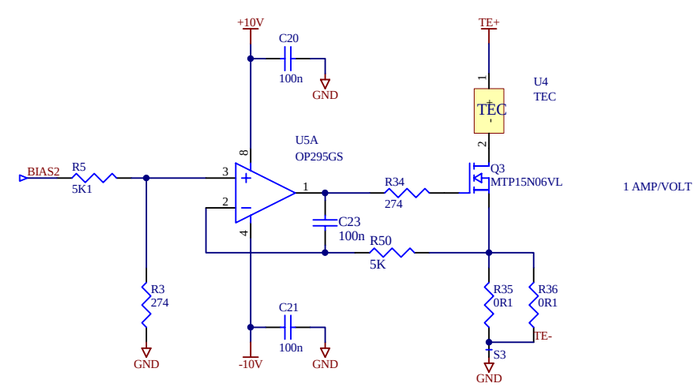

1 AMP/VOLT

Title		
GUIDER CAMERA PREAMP PCB		*OCIW* *813 Santa Barbara Street* *Pasadena, CA 91101* *www.ociw.edu*
Revision: 2.0	Date: 9/5/2008	
Sheet 2 of 2	File: C:\gcam\pre_v2\preB.SchDoc	