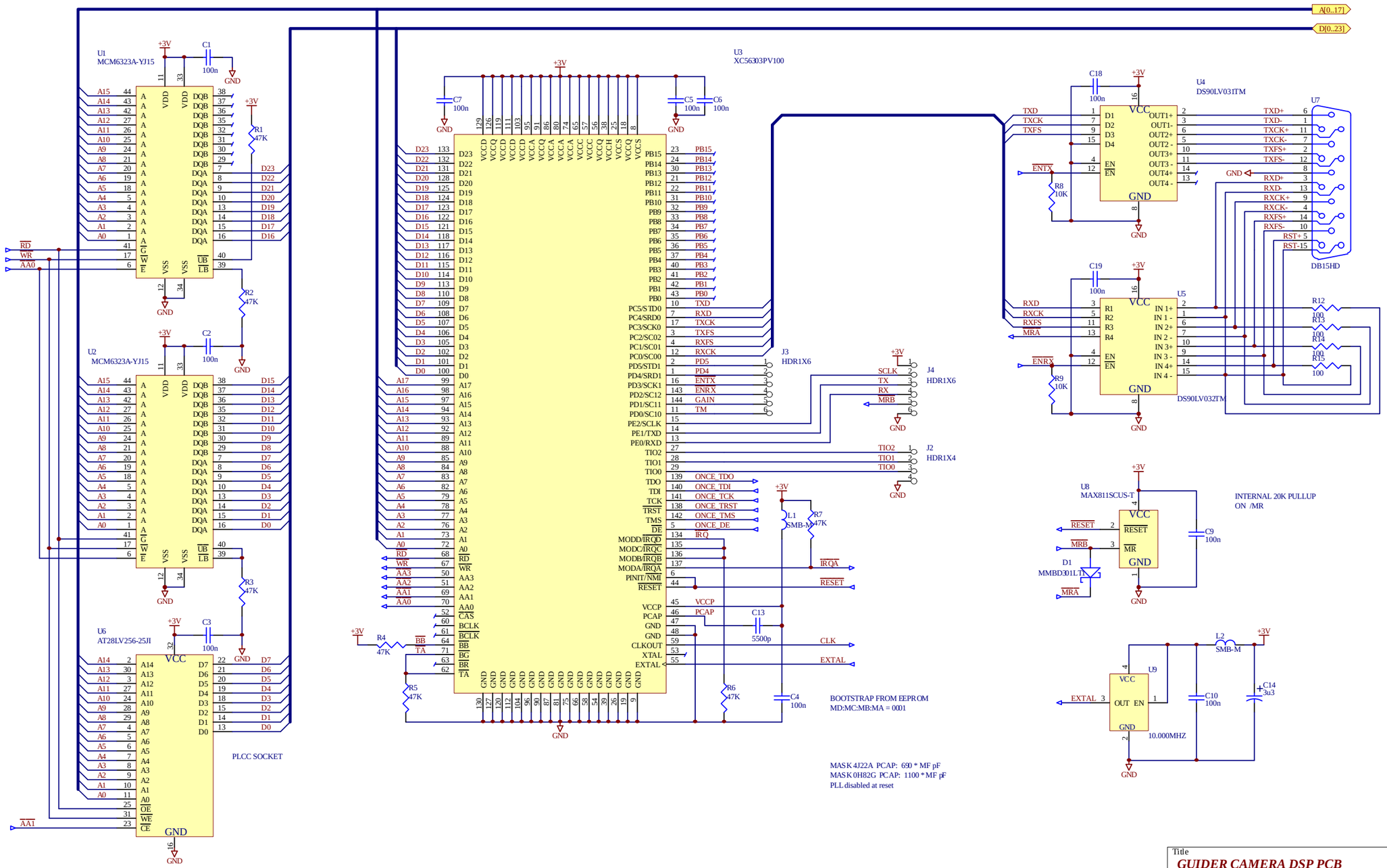

Title	GUIDER CAMERA DSP PCB		OCIW 813 Santa Barbara Street Pasadena, CA 91101 www.ociw.edu
Revision:	1.1b	Date: 06-Nov-03	
Sheet 1 of 2		File: C:\gcam\dsp_v1\dspA.SchDoc	

Memory Map

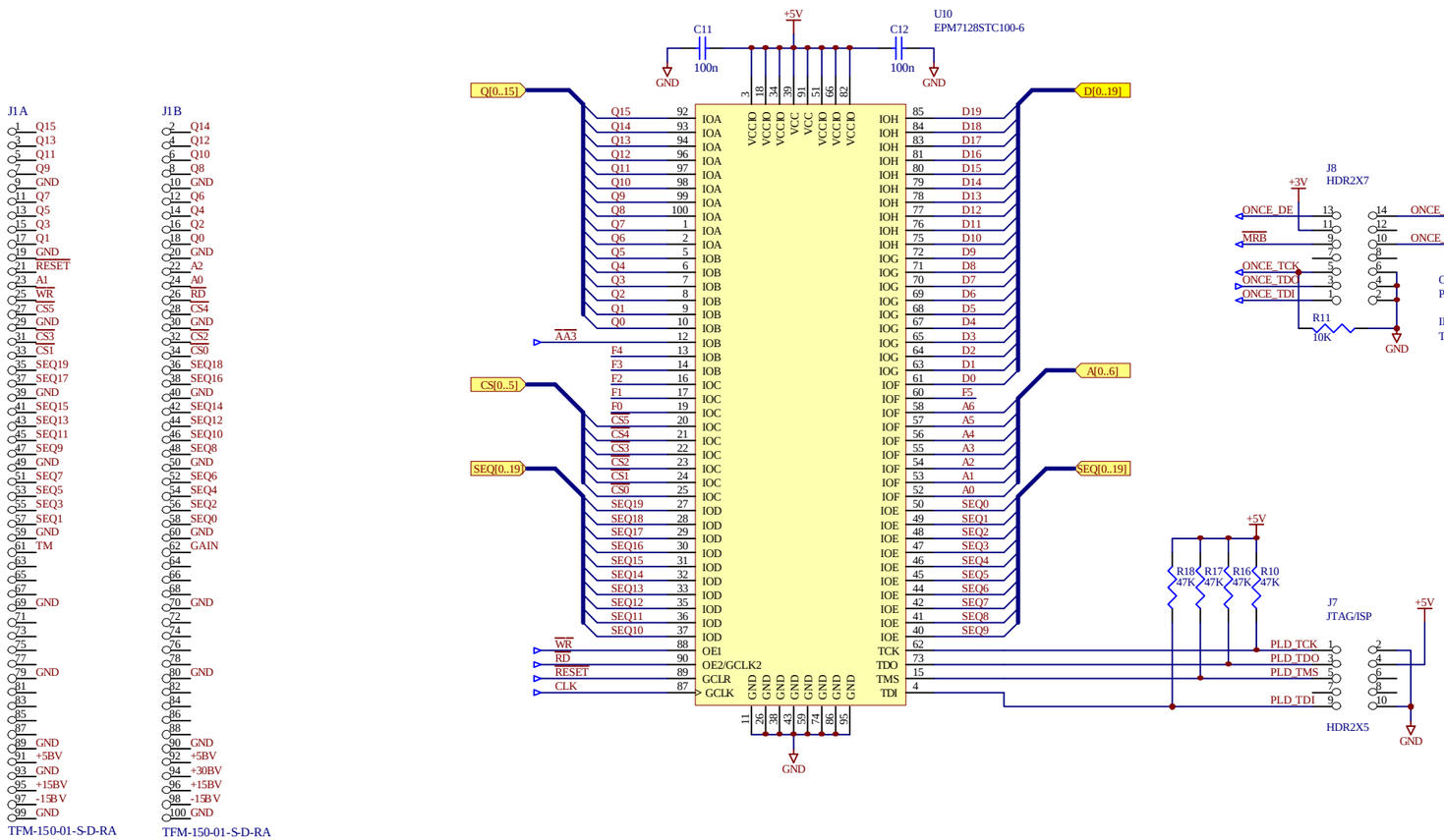

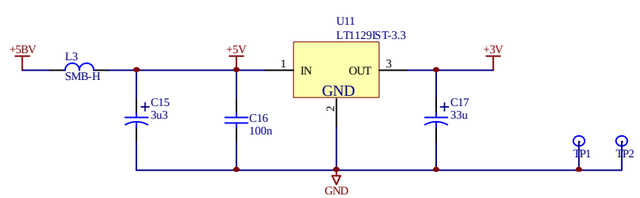

Title		
GUIDER CAMERA DSP PCB		*OCIW* *813 Santa Barbara Street* *Pasadena, CA 91101* *www.ociw.edu*
Revision: 1.1b	Date: 06-Nov-03	
Sheet 2 of 2	File: C:\gcam\dsp_v1\dspB.SchDoc	