CHANNEL_2 = CHANNEL_B = RIGHT AMP

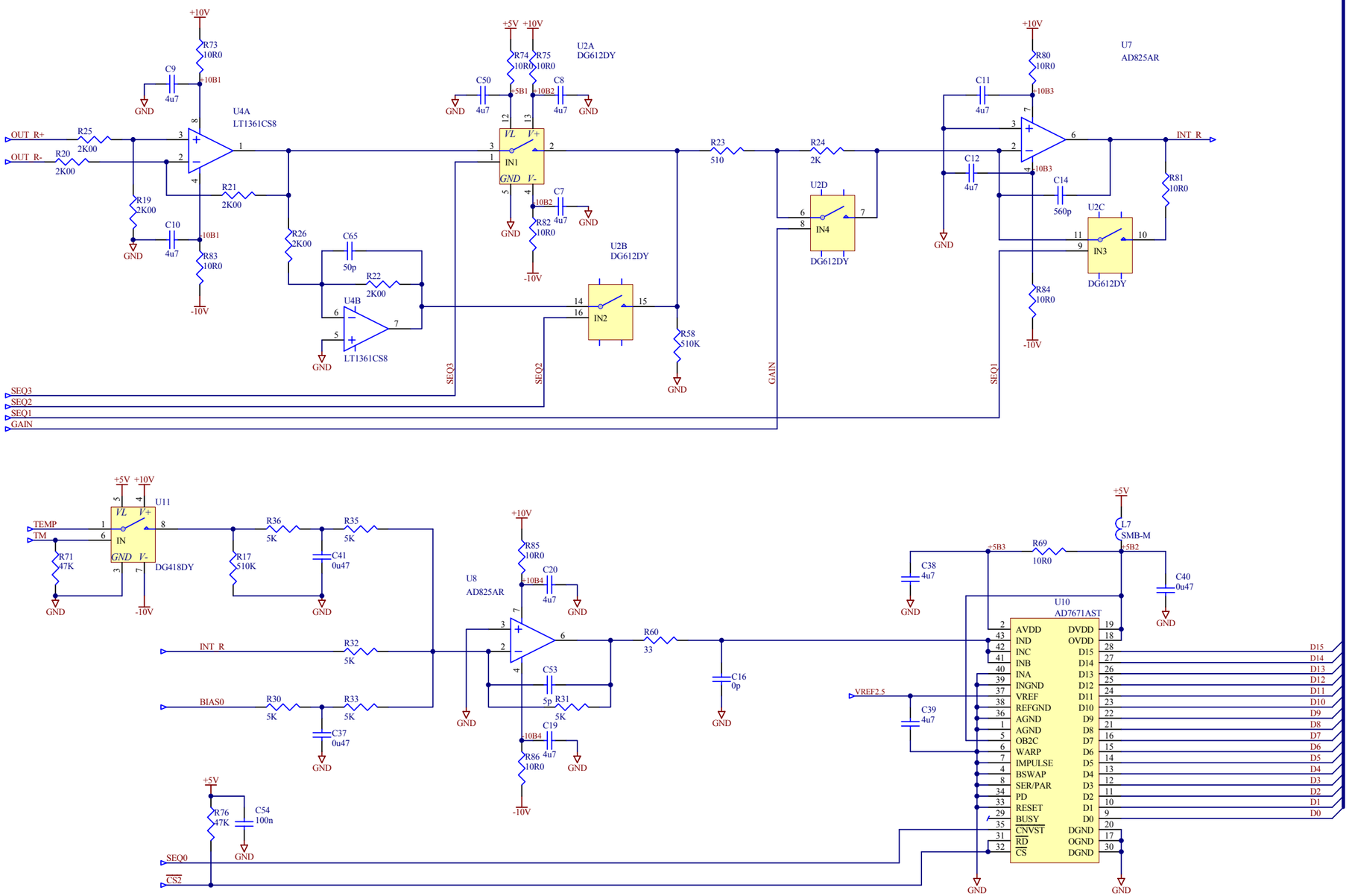

SWITCHES SHOWN FOR LOGIC 0

Title: GUIDER CAMERA SIGNAL PROCESSING PCB		OCIW 813 Santa Barbara Street Pasadena, CA 91101 www.ociw.edu
Revision: 2.0	Date: 7/6/2005	
Sheet 2 of 3	File: C:\gcam\sig_proc_v2\sigB.SchDoc	