The Inamori Magellan Areal Camera and Spectrograph (IMACS)

IMACS
CONTROL ELECTRONICS

Next Sheet
IMACS Table of Contents.doc

Next Sheet
IMACS Block Diagram.Sch

Carnegie Institution of Washington
The Observatories
813 Santa Barbara Street
Pasadena, California 91101
PHONE (818) 577-1122 FAX (818) 795-8136

IMACS

Title: IMACS Cover Sheet

Size: C	Scale:	Final Design: A. BAGISH	Revision:
Date: 8-Sep-2003 14:07:34		Initial Design: D. CARR	Sheet 0 of 90

File: C:\OCIW\Imacs 16 Aug 03\Motion Control System\IMACS Motion Control July 16 2003.DDB - Documents\IMACS Cover Sheet.Sch

28.00

19.00

18.00

78.00

INTERNAL RACK TEMPERATURE

RS-232 COMPUTER INTERFACE

SURGE SUPRESSOR

SURGE SUPRESSOR

IMACS SHUTTER CONTROLLER

DSP1 10-5

DEVELOPMENT COMPUTER

LINUX COMPUTER

LONG CAMERA SHUTTER 16-26 SX

DSP2 10-5

115AC

ON

OFF

LED POWER

SHORT CAMERA SHUTTER 16-26 SY

IMACS CONTROL CHASSIS 1

CENTER FIELD 20-41 SY

FILTER SERVER 2 20-41 SX

DIO 1A

DIO 1B

DIO 1C

STEPPER MOTOR INDEXER 1

MASK SERVER 20-41 SW

SLIT MASK ENCODER

FILTER SERVER 1 20-41 S

OVER-RIDE

PRI PRI

MS CRG

NORMAL

POWER 18-11 S

IMACS CONTROL CHASSIS 2

AUX 2-1 16-26 S

AUX 2-2

DIO 2A

DIO 2B

STEPPER MOTOR INDEXER 2

SHACK-HARTMANN GUIDE CAMERA 22-55 S

PRINCIPAL GUIDER 20-41 S

SHACK HARTMANN THETA ENCODER

SHACK HARTMANN RADIAL ENCODER

OVER-RIDE

SHT SHR

AUX 2-1 DG

NORMAL

POWER 18-11 SW

IMACS CONTROL COMPUTER

IMACS CONTROL CHASSIS 3

TILT A 20-41 S

TILT B 20-41 SW

TILT C 20-41 SX

DIO 3A

DIO 3B

DIO 3C

STEPPER MOTOR INDEXER 3

DISPERSER CAROUSEL 22-55 SW

HATCH 12-10 S

LAMPS 12-10 SW

OVER-RIDE

TILT A TILT B

TILT C DG

NORMAL

POWER 18-11 SX

IMACS CONTROL CHASSIS 4

SHORT CAMERA DEWAR FOCUS 16-26 S

DIO 4A

DIO 4B

LONG CAMERA DEWAR FOCUS 16-26 SW

STRUCTURE ROTATOR 16-8S

LONG CAMERA DEWAR FOCUS ENCODER

STEPPER MOTOR INDEXER 4

SHORT CAMERA DEWAR FOCUS ENCODER

OVER-RIDE

SCDF LCDF

AUX 4-1 AUX 4-2

NORMAL

POWER 18-11 SY

IMACS POWER SUPPLY

115V & 24V TELESCOPE POWER

5V UPS POWER

TEL 115VAC +24V

UPS 115VAC +5V

EMERGENCY MOTION STOP

LED POWER

ON

OFF

+24V

+5V

CHASSIS 1 18-11 S

CHASSIS 2 18-11 SW

CHASSIS 3 18-11 SX

CHASSIS 4 18-11 SY

IMACS rack front view 9 May 2002.
vlm

IMACS TABLE OF CONTENTS

IMACS Cover Sheet PAGE
IMACS Block Diagram 2 1
IMACS Schematics Top Sheet 2

IMACS PC 3

IMACS Chassis I 4
IMACS DIO MR1A 5
IMACS Filter I Driver 6
IMACS Filter I Motion 7
IMACS DIO MR1B 8
IMACS Mask Driver 9
IMACS Mask Motion 10
IMACS Filter 2 Driver 11
IMACS Filter 2 Motion 12
IMACS CFGC Driver 13
IMACS CFG Camera Rev. A 14
IMACS DIO MR1C 15
IMACS CHASSIS 1 ALTERA Logic Board 16

IMACS Power Supply Chassis 17
IMACS Long Camera Power Supply Chassis 18
IMACS Short Camera Power Supply Chassis 19
IMACS Guider Cameras Power Supply Chassis 20
IMACS Guider & Science Camera Power Cables 21
IMACS PI Motor Driver Power Supply Chassis 22

IMACS Chassis 2 23
IMACS DIO MR2A 24
IMACS DIO MR2B 25
IMACS SHGC Drivers 26
IMACS SHG Camera 27
IMACS PGC Driver 28
IMACS PG Camera 29
IMACS CHASSIS 2 ALTERA Logic Board 30

IMACS Chassis 3 31
IMACS DIO MR3A 32
IMACS DIO MR3B 33
IMACS Lamps/Fans 34
IMACS Lamp6 Digital Phase Control 35
IMACS DT Drivers 36
IMACS DT 37
IMACS DC Driver 38
IMACS DC 39
IMACS Hatch 40
IMACS CHASSIS 3 ALTERA Logic Board 41

IMACS Chassis 4 42
IMACS DIO MR4A 43
IMACS DIO MR4B 44
IMACS LDF Driver 45
IMACS LDF 46
IMACS STRUCTURE Driver 47
IMACS Structure Rotator 48
IMACS SDF Driver 49
IMACS SDF 50
IMACS CHASSIS 4 ALTERA Logic Board 51

IMACS Shutter Controller 52
IMACS Shutter 53
IMACS Shutter Trigger Cable 54
IMACS Shutter Test 55

IMACS Data Acquisition Unit A 56
IMACS RTD Thermal Sensors A 57
IMACS RTD Thermal Sensors B 58
IMACS Voltages Sensors C 59

IMACS Serial Ports 60
IMACS Serial Ports Simplified 61

RS-422 & Pressure & Transducer Excitation Chassis 62
CCD Vacuum Gauges 63

IMACS Black ABS Box Rack 64
RS-422 Communications 65

IMACS PI Motion Stage Controller 66
IMACS PI Encoder Repeater 67

IMACS Audio Monitor Block Diagram 68
IMACS Microphone Preamp/Driver 69
IMACS Audio Differential Receiver 70
IMACS Mic Cable Layout 71

IMACS MYCOM PPC-2410 mods 72

IMACS OPTO 22 I/O Mapping
Card 1 73
Card 2 74
Card 3 75
Card 4 76
Card 5 77

IMACS MCS Photos and Placement ***78***

IMACS MOTION CONTROL SYSTEM MCS MANUAL

IMACS Cover Sheet *PAGE*
IMACS Block Diagram 2 *1*
IMACS Schematics Top Sheet *2*

IMACS PC *3*

The MCS PC uses a 15-slot ISA back plane along with a Single Board Computer SBC, four Mycom motor Indexer cards and five ComputerBoards digital IO cards. A 16MB silicon disk is used for storage of the auto booting DOS control program. A floppy disk drive is installed but not connected. A hard disk containing all software and development programs is installed but not connected, an inbuilt backup of the system. The contents of the hard disk and the silicon disk, a subset of the hard disk, is also contained in the CD packed with the IMACS MCS 11x17 documentation binder.

The Mycom PPC2410 ISA card is a four axis motor controller with encoder feedback and various IO lines. No interrupts are used, and clock signals are of the ¨two-clock¨variety – one pulse train for clockwise motion and another pulse train for counter-clockwise motion.

DESIGN PHILOSOPHY

BRAKES

All motors with brakes utilize a fail-safe design that requires the brake coil to be energized before the motor can be moved. The computer has to command the brake release and no hard stop may be active before the motor will move.

FAILSAFE HARDSTOP LOGIC

In addition to failsafe brakes, fail-safe circuitry is provided to remove computer control of an individual motion stage if a hard stop limit has been activated. In order to restore normal operation, a technician must go out and remove the fault condition and then reset the hard stop logic. For each motion stage two functions pass through the hard stop logic.

1. The current cutoff to the motor driver and
2. Energization of the brake.

In the event of a hard stop trigger the Altera logic will immediately turn off the associated motor driver current and remove current flow from the brake release coil. To be able to move the stage off the hard stop, the associated hard stop bypass switch must be placed into the up position and will allow the computer to back out of the hard stop. When the fault condition is removed, the bypass switch may be reset and normal operation may once again take place.

COMPONENTS

Off the shelf components used in the MCS are the same as used in the C40, C100, CM1 and CM2

- Opto22 Input Output modules
- Mycom drivers UPS50 and INS50 star connection bi-polar constant current chopper.
- Mycom indexer cards
- Mycom 5phase stepper motors, 0.72 degrees step, 500 pulses rev.
- ComputerBoards Digital IO ISA cards, 48 lines.

HEAT DISSIPATION

A Rittal model SK3218.100 air-water heat exchanger is used to remove the heat generated by the MCS electronics to the telescope cooling fluid. The telescope provides 5 gal/min , 300 gal/hour flow of an ethylene glycol mixture at 2 to 3 degrees C above ambient temperature. The unit is rated at 3500W of cooling at 100 gal/hour; the approximate heat generation of the electronics is 750W, so there is a comfortable margin of heat removal capacity. The air water heat exchanger requires no maintenance. The fan of the air circuit is designed to run continuously. The thermostat for the solenoid valve has been disconnected and the solenoid valve is wired to be on continuously. Because the fluid temperature will never be below ambient temperature, condensation ought not to be a problem.

CHASSIS LED INDICATORS

All rack-mounted chassis are provided with a switch to turn off all LED indicators.

INDICATORS OF CORRECT OPERATION

Most if not all of the motor drivers have an LED that flicker when commands to move are given. The Mycom UPS50 drivers have an LED facing the back of each chassis, which are covered with aluminum tape.

The Renishaw encoders LED will glow green when the read head is a proper distance from and focused on the read tape. When the read head passes the home position, the LED will pulse red. These LEDs are also covered to prevent light pollution and will need to be uncovered in order to precisely reposition soft stops. A less accurate alternative is to take a laptop up to the platform and observe the appropriate GUI to see when a soft stop has been triggered.

Soft stops may be tested by running into the stop and checking the appropriate indicator in the user interface GUI.
Manually activating the hard stop and observing the LED indicators on the appropriate chassis may test hard stops.
As long as the hard stop LED is on, a fault condition remains.

Disconnected or inappropriately connected cables may be detected by observing two or more soft stops and hardtops on at the same time at the user interface GUI.

L05 focus motors are best tested by putting an ear near the collimator inside the instrument and listening to each motor move. Otherwise you will have to rely upon the encoder counts observed in the user interface GUI.

The science camera dewar focus mechanism has a shaft that can be seen turning at the back of the camera. As well, the GUI can be observed for proper encoder counts.

Most digital input or output signal or command status may be observed by looking at the LED indicators on the Opto22 units inside chassis 1 through 4.
Some of these signals go straight to the motor indexer cards and may be probed at the high density 80 pin to Phoenix contact breakout boards located in the inside front of each chassis.

Heat exchanger operation may be confirmed by observing the internal rack temperature as monitored by the data acquisition unit, as well as by fan noise.

PROTOCALS and CONVENTIONS

The long camera subsystems are designated as 1 because they were designed and built first. Example: Filter Server 1, DSP1 TRIG.
DSP1 TRIG refers to the Long Camera begin integration signal provided by the Long Science Camera saddlebag DSP board to initiate the opening and closing of the Long Camera shutter.
The short camera subsystems are designated as 2, example: Filter Server 2, DSP2 TRIG.
Except for the science camera dewar focus motor drivers, all motor drivers run in ¨two-clock¨¨bi-clock¨mode where a separate pulse waveform is required to move CW and to move CCW.
Brakes are run in fail-safe mode, where a current must be supplied before the brake will turn off.
Hard stops are operated in fail-safe mode, where a disconnect anywhere in-line will trigger the hard stop.

SAFETY

The AC power input to the system first enters a rack mounted TripLite noise and surge suppressor. Each chassis has three metal oxide varistors MOV that protect hot to chassis ground, neutral to chassis ground and hot to neutral. Note that their failure mode is a dead short. Circuit breakers and-or fuses are incorporated into each chassis.

Lamp 6 has a fuse located on the digital phase control board located in the back of chassis 3.
Appropriate Opto22 modules are fused and accessed through the top of the module.

Each solenoid in the instrument has a back EMF diode installed. Three switched inductors in the MCS have back EMF diode protection.

The power supply chassis has a ground fault circuit breaker mounted inside. It tripped whenever a chassis 3 disperser grating tilt cable was plugged in so was bypassed. It is not known if this fault has been removed.

AC power is sent through the Lamps Fans wrap cable to the black ABS box. This AC power is controlled by a heavy duty milspec switch on the front panel of Chassis 3 and is used to turn off power to the black ABS box when switching the high voltage piezo control lines plugged into the PI chassis contained within the black ABS box. Turn this switch off when you work inside the black ABS box if you want to avoid receiving an electrical shock! The air pressurization and air circulation fans are also powered by 117VAC.

IMACS Chassis I *4*

Chassis 1 controls Filter Server 1 and Filter Server 2, as well as the Mask Server and the Center Field Guide Camera.

IMACS DIO MR1A *5*
IMACS Filter I Driver *6*
IMACS Filter I Motion *7*

Filter Server 1 uses

- 1 Mycom UPS50 5 phase stepper motor driver
- 1 Mycom PS596AM motor with a brake
- 1 Renishaw RGH22 encoder
- 2 soft limit switches
- 1 near switch
- 2 hard limit switches
- 2 air cylinder retract limit switches
- 2 air cylinder extend limit switches
- 1 air solenoid
- 2 air cylinders

IMACS DIO MR1B *8*

Digital IO Rack MR1B uses

- 5 SNAP IDC5 Opto22 input modules
- 1 SNAP ODC5SRC Opto22 source output module

IMACS Mask Driver *9*
IMACS Mask Motion *10*

The Slit Mask Server uses

- 1 Mycom UPS50 5 phase stepper motor driver
- 1 Mycom PS596AM motor with a brake
- 1 Dynamic Research Corp DRC LB4A 0320 EL L03XXB0 encoder
- 2 soft limit switches
- 1 near switch
- 2 hard limit switches
- 2 air cylinder retract limit switches
- 2 air cylinder extend limit switches
- 2 air solenoids
- 2 air cylinders
- 1 mask installed sensor Turck Bi2 K11 AN6 inductive
- 8 mask position open sensors Turck Bi2 K11 AN6 inductive

IMACS Filter 2 Driver *11*
IMACS Filter 2 Motion *12*

Filter Server 2 uses

- 1 Mycom UPS50 5 phase stepper motor driver
- 1 Mycom PS596AM motor with a brake
- 1 Renishaw RGH22 encoder
- 2 soft limit switches
- 1 near switch
- 2 hard limit switches
- 2 air cylinder retract limit switches
- 2 air cylinder extend limit switches
- 1 air solenoid

2 air cylinders
IMACS CFGC Driver *13*
IMACS CFG Camera Rev. A *14*
The Center Field Guider uses
1 Mycom UPS50 5 phase stepper motor driver
1 Mycom PS569AM motor with a brake
2 soft limit switches
1 near switch
2 hard limit switches
2 filter and lens shuttle retract limit switches
2 filter and lens shuttle extend limit switches
2 air solenoids
2 air cylinders
IMACS DIO MR1C *15*
Digital IO Rack MR1C uses
1 SNAP IDC5 Opto22 input module
1 SNAP ODC5R Opto22 relay output module

IMACS CHASSIS 1 ALTERA Logic Board *16*
Protected subsystems are
Filter Server 1
Filter Server 2
Mask Server
Center Field Guider Camera no brake function not used

IMACS Power Supply Chassis *17*

One power supply chassis supplies 24VDC, 5VDC and 117VAC power to all 4 motion control system chassis. The capability exists to isolate the 5VDC supply from the 24VDC and 117VAC supplies if additional noise filtering is needed. Chassis 2 also includes a separate 5.6VDC supply to operate the guide camera encoders and chassis 4 includes a 48VDC supply for the science camera focus motor.

The big red mushroom emergency off button turns off the 117VAC and 24VDC power only. The 5VDC is left on so that all the digital logic states do not get reinitialized

IMACS Long Camera Power Supply Chassis *18*
Contains 2 48VDC center tapped supplies. One switch is used to switch AC on and must be switched on first; the second switch is to transfer the DC across once the supply has stabilized.
IMACS Short Camera Power Supply Chassis *19*
Contains 2 48VDC center tapped supplies. One switch is used to switch AC on and must be switched on first; the second switch is to transfer the DC across once the supply has stabilized.
IMACS Guider Cameras Power Supply Chassis *20*
Contains 2 48VDC center tapped supplies, one of which is an installed spare. There is no need to sequence the turn on of this supply.
IMACS Guider & Science Camera Power Cables *21*
IMACS PI Motor Driver Power Supply Chassis *22*

IMACS Chassis 2 *23*

Chassis 2 controls the Shack Hartmann theta and radial guide cameras as well as the Principal Guide Camera. The Shack Hartmann radial Renishaw encoder power is controlled by an OPTO22 relay contact module under computer control. An inductor is wired in series to the supply line to eliminate glitch-causing noise spikes caused by current surge through the relay contacts at initial turn on. The power to the encoder is turned off in between moves to eliminate light leakage from the LED indicator and read head, which is quite a light polluter during CCD integration time. The power supply for the SH radial and theta encoders and the Principal Guider encoder is set at 5.6VDC in chassis 2, to compensate for the line loss in the cable wrap.
IMACS DIO MR2A *24*
Digital IO Rack MR1B uses
3 SNAP IDC5 Opto22 input modules
1 SNAP ODC5SNK Opto22 sink output module
2 SNAP ODC5SRC Opto22 source output modules
IMACS DIO MR2B *25*
Digital IO Rack MR2B uses
1 SNAP ODC5R Opto22 relay output module
IMACS SHGC Drivers *26*
IMACS SHG Camera *27*
The Shack Hartmann Guider uses
1 Mycom UPS50 131 5 phase stepper motor driver theta
1 Mycom UPS50 030 5 phase stepper motor driver radial
1 Mycom PS569ACM motor with a brake theta
1 Mycom PS566AM motor with a brake radial
2 Renishaw RGH 24D encoders
4 soft limit switches
2 near switches
2 hard limit switches theta only
2 filter and lens shuttle retract limit switches
2 filter and lens shuttle extend limit switches
2 air solenoids
IMACS PGC Driver *28*
IMACS PG Camera *29*
The Principle Guide Camera uses
1 Mycom UPS50 5 phase stepper motor driver
1 Mycom PS569AM motor with a brake
1 Renishaw RGH 24D encoder
2 soft limit switches
1 near switch
2 hard limit switches
1 retract limit switch
1 extend limit switch
1 air solenoid
IMACS CHASSIS 2 ALTERA Logic Board *30*
Protected subsystems are
Principal Guide Camera
Shack Hartmann Theta Camera
Shack Hartmann Radial Guide Camera is not protected.

IMACS Chassis 3 *31*

Chassis 3 controls the disperser carousel wheel motion and the tilt for three grating tilt stages. Control of the calibration lamps, lamp 6 intensity level, hatch control and AC power to the black ABS box is also located in Chassis 3.
IMACS DIO MR3A *32*
Digital IO Rack MR3A uses
2 SNAP OAC5 Opto22 AC Output modules
1 SNAP ODC5R Opto22 relay output module
1 SNAP ODC5SRC Opto22 source output module
2 SNAP IDC5 Opto22 input modules

IMACS DIO MR3B *33*
Digital IO Rack MR3B uses
4 SNAP IDC5 Opto22 input modules
1 SNAP ODC5SNK Opto22 sink output module
1 SNAP ODC5SRC Opto22 source output module
IMACS Lamps/Fans *34*
The high level GUI computer switches on and off 5 rare gas calibration lamps. Two different models of power supply are used for the lamps, as shown in the schematic.
AC power is also sent through the Lamps Fans wrap cable to the black ABS box. This AC power is controlled by a heavy duty milspec switch on the front panel of Chassis 3 and is used to turn off power to the black ABS box when switching the high voltage piezo control lines plugged into the PI chassis contained within the black ABS box. Turn this switch off when you work inside the black ABS box if you want to avoid receiving an electrical shock!

IMACS Lamp6 Digital Phase Control *35*
The discrete illumination levels of the Lamp6 halogen bulb is created by splitting each quadrant of the applied 117VAC into 16 time intervals, starting the count on the zero crossing of the AC waveform and shutting off current flow at the end of the count loaded by the GUI computer.
IMACS DT Drivers *36*
IMACS DT *37*
The Disperser Grating Tilt mechanisms use
3 Mycom INS50 110 Hi Resolution 5 phase stepper motor drivers
3 Mycom PF566AM hi resolution stepper motors with no brake
3 Renishaw RGB25Y00R00 0.1 micron encoders
6 soft limit SUNX GXL H12F proximity switches
3 near SUNX GXL H12F proximity switches
6 hard limit switches Honeywell 311SM5 T

The INS50 driver is set to divide the 0.72 degree basic step by 25, so there are 125,000 steps per revolution. Two-clock (CW , CCW) input pulses are used. An OPTO22 relay contact module under computer control controls the disperser grating tilt mechanisms Renishaw encoder power. The power to the three encoders is turned off in between moves to eliminate light leakage from the LED indicator and read head. An inductor is wired in series to the supply line to eliminate glitch-causing noise spikes caused by current surge through the relay contacts at initial turn on.

IMACS DC Driver *38*
IMACS DC *39*
The Disperser Carousel uses
1 Mycom UPS50 5 phase stepper motor driver
1 Mycom PS596 AM motor with a brake
1 Renishaw RGH 24D 5 micron encoder
2 soft limit switches
2 brake extend retract limit switches OSIN 014
1 near switch
2 hard limit switches Honeywell 311SM5 T
4 retract limit switch Bimba MSK X NPN Sink Normally Open
4 extend limit switch Bimba MSK X NPN Sink Normally Open
2 air solenoids Disperser clamp actuator and Disperser carousel clamp brake
24 DSS load switches Honeywell 311SM5 T

IMACS Hatch *40*
The hatch uses one control line to open the hatch and another control line to close the hatch. Limit switches are internal to the hatch.

IMACS CHASSIS 3 ALTERA Logic Board *41*

Protected subsystems are

Disperser Carousel
Disperser Grating Tilt A
Disperser Grating Tilt B
Disperser Grating Tilt C

The Disperser Grating Tilt mechanisms originally used motors that had brakes but have since been replaced with high-resolution motors with no brakes. The old brake connections to the Altera hard stop logic were removed and have been left dangling.

IMACS Chassis 4 *42*

Chassis 4 contains the drive circuitry and feedback control for the long and short science camera focus stages. A motor driver to rotate the structure during integration and test is also located in Chassis 4. In normal use this driver and connector on the front panel of Chassis 4 will not be used.

IMACS DIO MR4A *43*

Digital IO Rack MR4A uses

1 SNAP IDC5 Opto22 input module

IMACS DIO MR4B *44*

Digital IO Rack MR4B uses

No installed modules

IMACS LDF Driver *45*

IMACS LDF *46*

The Long Detector Science Camera Focus mechanism uses

1 Gecko G210 stepper motor driver
1 Phytron ZSS32 200 1,2 stepper motor with an integral HEDL 5540 encoder
2 soft limit switches Honeywell 311SM5 T
2 hard limit switches Honeywell 311SM5 T

IMACS STRUCTURE Driver *47*

IMACS Structure Rotator *48*

The structure rotator uses

1 Mycom PSU50 stepper motor driver
1 Mycom PF6913BC stepper motor

After delivery and instrument integration at the Baade telescope this rotator will no longer be used.

IMACS SDF Driver *49*

IMACS SDF *50*

The Short Detector Science Camera Focus mechanism uses

1 Gecko G210 stepper motor driver
1 Phytron ZSS32 200 1,2 stepper motor with an integral HEDL 5540 encoder
2 soft limit switches Honeywell 311SM5 T
2 hard limit switches Honeywell 311SM5 T

The Phytron motor is a NEMA size 42, 200 steps per revolution, 1.2 amp motor winding with the windings connected in series.

IMACS CHASSIS 4 ALTERA Logic Board *51*

Protected subsystems are

Long Science Camera Dewar focus mechanism
Short Science Camera Dewar focus mechanism

IMACS Shutter Controller *52*

The shutter controller uses

1 four-channel Model E 4000 LINMOT driver
1 ¨Jackrabbit BL1810¨ PC104 single board microprocessor to communicate between the driver and the GUI interface.

IMACS Shutter *53*
IMACS Shutter Trigger Cable *54*

Shutter trigger inputs from the science camera CCD DSP trigger saddlebag are optoisolated before entry to the Jackrabbit microprocessor.

Each of the shutter blade linear motors has the same type keyed connector, so they can be swapped with each other for testing purposes. Note that the timing response of each blade is slightly different from each other.

IMACS Shutter Test *55*

IMACS Data Acquisition Unit A *56*

The data acquisition system uses

1 Agilent Technologies 34970A base unit with included DMM
3 HP34901A 20 channel MUX input modules

The unit monitors twenty-two temperatures, air pressure, two coolant pressures and fourteen power supply voltages of the DOS control computer, MCS, and guide and science camera power supplies.

IMACS RTD Thermal Sensors A *57*

Module A measures ten 4 wire RTD temperatures and two current loop pressures

IMACS RTD Thermal Sensors B *58*

Module B measures ten 4 wire RTD temperatures and two current loop pressures. One current loop pressure measurement channel is a spare.

IMACS Voltages Sensors C *59*

Module A measures two 4 wire RTD temperatures, fourteen voltage measurements and two spare current loop pressure channels. There are two spare 2-wire measurement channels available.

The pressure transducers are rated at 100 psi 4-20 mA with a 1/8 inch NPT fitting. Overpressure rating is 200 psi.

IMACS Serial Ports *60*

Six devices have serial ports in the IMACS MCS. A 16 channel Lantronix TC-IP to RS232 converter is used to provide the interface between the high level GUI control computer and the six serial devices of the IMACS MCS. The six serial devices consist of the MCS DOS control computer, two science camera vacuum gauges, the Agilent Technologies data acquisition unit, the Physik Instrumente flexure controller and the PI L05 focus controller.

IMACS Serial Ports Simplified *61*

RS-422 & Pressure & Transducer Excitation Chassis *62*

This chassis contains two separate functions. A 24DC supply is used as an excitation source for the pressure gauges and three RS232 to RS422 converters that are used to communicate with the black ABS box.

CCD Vacuum Gauges *63*

IMACS Black ABS Box Rack *64*

The black ABS box is located within the instrument and is provided with it's own heat exchanger and fluid coolant lines. Located within this 19 inch rack mount case are the Physik Instrument PZT controller, used as flexure control, two vacuum gauge display-controllers used to monitor the vacuum in the science dewars, and three variacs used to control the speed of the fans in the black ABS box heat exchanger, air pressurization fan and air circulation fans. Power for the microphone amplifiers are provided within this box as well. The case is lined with high R value thermal insulation. Three differential RS422 lines are used to communicate between the RS-422 & Pressure & Transducer Excitation Chassis and the black ABS box PI controller and two vacuum gauges.

IMACS L05 Focus Motor Chassis *65*

L05 focus is performed by three DC linear motors with feedback control. The controller-drivers are located within their own chassis located in Rack 2.

IMACS PI Motion Stage Controller *66*

The PI Motion Stage Controller is located in the black ABS box inside the instrument and controls the flexure motion of the CCD science camera using high voltage piezo transducers.

IMACS PI Encoder Repeater *67*

Three linear motor driver repeaters plus spares are located in the spare parts for the PI Motion Stage Controller. If any flakiness develops in motor motion or feedback these self-powered units may be inserted inline to reamplify and buffer the signals for two-way transmission over the cable wrap.

IMACS Audio Monitor Block Diagram *68*

A dual channel audio microphone system is included to provide aural confirmation of the operation of IMACS. One microphone pickup is located next to the disperser server on the Main Optical Support Structure (MOSS), the other on the Front Optical Support Structure disk (FOSS disk) The FOSS disk carries the three guide cameras, the slit-mask shuttle and transfer mechanisms. These differential signals are sent down to a pair of amplified speakers in the control room.

IMACS Microphone Preamp/Driver *69*

The Microphone preamp has inputs for both dynamic and condenser microphones. Microphone gain is adjusted via potentiometer R3. The amplified output of the preamp is a differential signal for transmission over long distances with a high common mode rejection ratio.

IMACS Audio Differential Receiver *70*

The differential receiver has two input channels and two single ended outputs. Output gain is adjusted via potentiometers R1 and R2. Any self-powered PC speaker system may be plugged into the standard stereo mini jack.

IMACS Mic Cable Layout *71*

IMACS MYCOM PPC-2410 mods *72*

The motor indexer cards had to be modified as shown in this schematic. The four spare indexers have already been modified. Each indexer controls four motors and includes feedback and digital I-O.

IMACS OPTO 22 I/O Mapping

Memory mapped addressing is used to control OPTO22 devices within the IMACS MCS.

Card 1 *73*
Card 2 *74*
Card 3 *75*
Card 4 *76*
Card 5 *77*

IMACS MCS Photos and Placement ***78***

BACK

1

IMACS MOTION CONTROL PC

SC1 INDEXER PRC-2410 — A, B, C, D

CIO 1 — P1, P2

CIO 2 — P1, P2

PC POWER SUPPLY

SC 2 INDEXER PRC-2410 — A, B, C, D

CIO 3 — P1, P2

SC 3 INDEXER PRC-2410 — A, B, C, D

CIO 4 — P1, P2

SC 4 INDEXER PRC-2410 — A, B, C, D

CIO 5 — P1, P2

LANTRONIX ETS16P

TC / IP TO RS232

TC-IP TO GUI COMPUTER

PORT 4 — DOS COMPUTER

PORT 2 — L05 FOCUS 1,2,3

PORT 3 — FLEXURE CONTROL

PORT 5 — HP DATA ACQUISITION

PORT 6 — VAC GAUGE 1

PORT 7 — VAC GAUGE 2

CONTROL CHASSIS 1

Filter Server 1 Driver — IMACS Filter 1 Driver.Sch — STEPPER DRIVER

Slit Mask Driver — IMACS Mask Driver.Sch — STEPPER DRIVER

Filter Server 2 Driver — IMACS Filter 2 Driver.Sch — STEPPER DRIVER

Center Field GC Driver — IMACS CFGC Driver.Sch — STEPPER DRIVER

OPTO 22 I/O — IMACS DIO MR1A.Sch

OPTO 22 I/O — IMACS DIO MR1B.Sch

OPTO 22 I/O — IMACS DIO MR1C.Sch

POWER

(XTRA 2 MS PROX SENSORS)

CONTROL CHASSIS 2

Shack-Hartmann Driver — IMACS SHGC Drivers.Sch — STEPPER DRIVER, STEPPER DRIVER

Principal Guide Camera Driver — IMACS PGC Driver.Sch — STEPPER DRIVER

SPARE — STEPPER DRIVER

OPTO 22 I/O — IMACS DIO MR2A.Sch

OPTO 22 I/O — IMACS DIO MR2B.Sch

CONTROL CHASSIS 3

Disperser Tilt Drivers — IMACS DT Drivers.Sch — STEPPER DRIVER, STEPPER DRIVER, STEPPER DRIVER

Disperser Carousel Driver — IMACS DC Driver.Sch — STEPPER DRIVER

OPTO 22 I/O — IMACS DIO MR3A.Sch

OPTO 22 I/O — IMACS DIO MR3B.Sch

OPTO 22 I/O — IMACS DIO MR3C.Sch

CONTROL CHASSIS 4

STRUCTURE ROTATOR DRIVER — IMACS Structure Driver.Sch — STEPPER DRIVER

Long DETECTOR Focus Driver — IMACS LCF Driver. Sch — STEPPER DRIVER

Short DETECTOR Focus Driver — IMACS SCF Driver.Sch — STEPPER DRIVER

SPARE — STEPPER DRIVER

OPTO 22 I/O — IMACS DIO MR4A.Sch

OPTO 22 I/O — IMACS DIO MR4B.Sch

PI CONTROLLER — C-862 x 4 — www.pi.ws

PI PZT E-515

RS232-RS422 MODEL 365

POWER SUPPLY CHASSIS

24 VDC

5 VDC

TELESCOPE DIRECT POWER

TELESCOPE CONTINUOUS POWER

HP DATA ACQ. METER

HP 34970A

CABLE WRAP APROX. 15 METERS

IMACS INTSRUMENT

Filter Select 1 — IMACS Filter 1 Motion.Sch — 1 - STEPPER MOTOR; 2 - ENCODER; 2 - SOFT LIMITS; 1 - NEAR SW; 2 - HARD LIMITS — FS1J7: 1 - AIR VALVE; 4 - LIMITS

Mask Server — IMACS Mask Motion.Sch — 1 - STEPPER MOTOR; 1 - ENCODER; 2 - SOFT LIMITS; 1 - NEAR SW; 2 - HARD LIMITS — 2 - AIR VALVES; 4 - LIMITS; 3 - POS. SENSORS

Filter Select 2 — IMACS Filter 2 Motion.Sch — 1 - STEPPER MOTOR; 1 - ENCODER; 2 - SOFT LIMITS; 1 - NEAR SW; 2 - HARD LIMITS — FS2J7: 1 - AIR VALVE; 4 - LIMITS

Center Field Guide Camera — IMACS CFG Camera.Sch — 1 - STEPPER MOTOR; 2 - SOFT LIMITS; 1 - NEAR SW; 2 - HARD LIMITS — 1 - AIR VALVE; 4 - LIMITS

Shack-Hartmann Guide Camera — IMACS SHG Camera.Sch — SH1J7: 2 - AIR VALVE; 4 - LIMITS — SH3J12, SH4J17: 2 - STEPPER MOTOR; 2 - ENCODER; 4 - SOFT LIMITS; 2 - NEAR SW; 4 - HARD LIMITS

Principal Guide Camera — IMACS PG Camera.Sch — PG1J7: 1 - AIR VALVE; 4 - LIMITS — 1 - STEPPER MOTOR; 1 - ENCODER; 2 - SOFT LIMITS; 1 - NEAR SW; 2 - HARD LIMITS

Disperser — Disperser Motion sheet 2 — TILT: 3 - STEPPER MOTOR; 3 - ENCODER; 6 - SOFT LIMITS; 3 - NEAR SW; 6 - HARD LIMITS; 3 - BRAKES

CLAMPS: 1 - AIR VALVE; 18 - LIMITS

CAROUSEL: 1 - STEPPER MOTOR; 1 - ENCODER; 2 - SOFT LIMITS; 1 - NEAR SW; 2 - HARD LIMITS; 1 - BRAKES; 6 - POSITION SW

Disperser Motion sheet 1

6 Lamps — IMACS Lamps.Sch — 5 - LAMP POWER SUPPLIES; 6 - LAMPS; 3 - FANS

Hatch — IMACS Hatch.Sch — 1 - AC MOTOR; 1 - AIR VALVE; 2 - LIMITS

STRUCTURE ROTATOR DRIVER — IMACS Structure Motion.Sch — 1 - STEPPER MOTOR

Long Detector Focus — IMACS LDF.Sch — 1 - STEPPER MOTOR; 2 - SOFT LIMITS; 2 - HARD LIMITS

Short Detector Focus — IMACS SDF.Sch — 1 - STEPPER MOTOR; 2 - SOFT LIMITS; 2 - HARD LIMITS

PI Repeater

PI Repeater

PI Repeater

PI Flexure Motion Stage Controller.Sch — LCAM TIP, TILT, PISTON — L05 FOCUS1, L05 FOCUS2, L05 FOCUS3

DETECTOR X-Y MOTION FLEXURE

RS422-RS232 MODEL 365

PI CONTROLLER Model C-844.40 Precision Motor Controller

Model C-844.40 VAC GAUGE 1

VAC GAUGE 2 Model C-844.40

22 TEMPERATURE SENSORS

3 PRESSURE SENSORS

NEXT SHEET
IMACS Schematics Top Sheet.Sch

Carnegie Institution of Washington

The Observatories
813 Santa Barbara Street
Pasadena, California 91101
PHONE (818) 577-1122 FAX (818) 795-8136

IMACS

Title: IMACS CONTROLLER BLOCK DIA.

Size: C	Scale:	Drawn By: A. Ragish	Revision:
Date: 8-Sep-2003 14:07:35		Checked By:	Sheet 1 of 90

File: C:\OCIW\Imacs 16 Aug 03\Motion Control System\IMACS Motion Control July 16 2003.DDB - Documents\IMACS Block Diagram.sch

BACK

IMACS PC
IMACS PC.Sch

CIO1 P1
CIO1 P2
CIO2 P1
CIO2 P2
STEPPER INDEXER 1
CIO3 P1
CIO3 P2
STEPPER INDEXER 2
CIO4 P1
CIO4 P2
STEPPER INDEXER 3
CIO5 P1
CIO5 P2
STEPPER INDEXER 4

IMACS Chassis 1
IMACS Chassis 1.Sch
DIO MR1A
DIO MR1B
DIO MR1C
STEPPER INDEXER 1
CHASSIS 1 POWER

IMACS Power Supply Chassis
IMACS Power Supply Chassis
CHASSIS 1 POWER
CHASSIS 2 POWER
CHASSIS 3 POWER
CHASSIS 4 POWER

IMACS Chassis 2
IMACS Chassis 2.Sch
CHASSIS 2 POWER
DIO MR2A
DIO MR2B
STEPPER INDEXER 2

Data Acquisition
IMACS Data Acquisition Unit.Sch

Shutter
IMACS Shutter Controller.Sch

IMACS Chassis 3
IMACS Chassis 3.Sch
CHASSIS 3 POWER
DIO MR3A
DIO MR3B
STEPPER INDEXER 3

Serial Communications
Serial Ports.Sch

IMACS Chassis 4
IMACS Chassis 4 .Sch
CHASSIS 4 POWER
DIO MR4A
DIO MR4B
STEPPER INDEXER 4

IMACS Power Supplies
IMACS Power Supply Chassis.Sch

IMACS Data Acquisition Unit A
IMACS Data Acquisition Unit A.Sch

IMACS Black ABS Rack
IMACS Black ABS Rack.Sch

PI Motor Driver Power Supply Chassis
PI Motor Driver Power Supply Chassis.Sch

L05 Focus Chassis
Camera Focus Controller Power Supply Chassis.Sch

IMACS Data Acquisition Unit B
IMACS Data Acquisition Unit B.Sch

PI line driver overall
PI line driver overall.sch

Audio Block Diagram
Audio Block Diagram.Sch

Carnegie Institution of Washington
The Observatories
813 Santa Barbara Street
Pasadena, California 91101
PHONE (818) 577-1122 FAX (818) 795-8136

IMACS

Title: IMACS CONTROLLER TOP SHEET

Size: C	Scale:	Drawn By: A. Bagish	Revision:
Date: 8-Sep-2003 14:07:35		Checked By:	Sheet 2 of 90

File: C:\DOCS\Imacs 16 Aug 03\Motion Control System\IMACS Motion Control July 16 2003.DDB - Documents\IMACS Schematics Top Sheet.Sch

19

BACK

CIO5 — CONNECTOR: DIGI-KEY MKC50K-ND — CIO-DUAL-AC5 — ADDRESS 0011011 — ISA SLOT 14 — ADDRESS = 320-327 HEX

CIO4 — CIO-DUAL-AC5 — ADDRESS 0011100 — ISA SLOT 13 — ADDRESS = 318-31F HEX

CIO3 — CIO-DUAL-AC5 — ADDRESS 0011101 — ISA SLOT 12 — ADDRESS = 310-317 HEX

CIO2 — CIO-DUAL-AC5 — ADDRESS 0011110 — ISA SLOT 11 — ADDRESS = 308 - 30F HEX

CIO1 — CIO-DUAL-AC5 — ADDRESS 0011111 — ISA SLOT 10 — ADDRESS = 300 - 307 HEX

Each CIO: P2 EVEN PINS 2-50 GND; 10Kohm PULLUP RESISTOR PACK; SW HEX A9 200, A8 100, A7 80, A6 40, A5 20, A4 10, A3 8, A2 4; ADDRESS 9 8 7 6 5 4 3; P1 CHASSIS 4 / CHASSIS 3 / CHASSIS 2 / CHASSIS 1 EVEN PINS 2-50 GND; PORT C7 … PORT A0; +5V

CIO5 P2: 1 PORT C7, 3 PORT C6, 5 PORT C5, 7 PORT C4, 9 PORT C3, 11 PORT C2, 13 PORT C1, 15 PORT C0, 17 PORT B7, 19 PORT B6, 21 PORT B5, 23 PORT B4, 25 PORT B3, 27 PORT B2, 29 PORT B1, 31 PORT B0, 33 PORT A7, 35 PORT A6, 37 PORT A5, 39 PORT A4, 41 PORT A3, 43 PORT A2, 45 PORT A1, 47 PORT A0, 49 +5V

CIO5 P1 CHASSIS 4: 1 PORT C7, 3 PORT C6, 5 PORT C5, 7 PORT C4, 9 PORT C3, 11 PORT C2, 13 PORT C1, 15 PORT C0, 17 PORT B7, 19 PORT B6, 21 PORT B5, 23 PORT B4, 25 PORT B3, 27 PORT B2, 29 PORT B1, 31 PORT B0, 33 PORT A7, 35 PORT A6, 37 PORT A5, 39 PORT A4, 41 PORT A3, 43 PORT A2, 45 PORT A1, 47 PORT A0, 49 +5V

CIO4 P2: 1 PORT C7, 3 PORT C6, 5 PORT C5, 7 PORT C4, 9 PORT C3, 11 PORT C2, 13 PORT C1, 15 PORT C0, 17 PORT B7, 19 PORT B6, 21 PORT B5, 23 PORT B4, 25 PORT B3, 27 PORT B2, 29 PORT B1, 31 PORT B0, 33 PORT A7, 35 PORT A6, 37 PORT A5, 39 PORT A4, 41 PORT A3, 43 PORT A2, 45 PORT A1, 47 PORT A0, 49 +5V

CIO4 P1 CHASSIS 3: 1 PORT C7, 3 PORT C6, 5 PORT C5, 7 PORT C4, 9 PORT C3, 11 PORT C2, 13 PORT C1, 15 PORT C0, 17 PORT B7, 19 PORT B6, 21 PORT B5, 23 PORT B4, 25 PORT B3, 27 PORT B2, 29 PORT B1, 31 PORT B0, 33 PORT A7, 35 PORT A6, 37 PORT A5, 39 PORT A4, 41 PORT A3, 43 PORT A2, 45 PORT A1, 47 PORT A0, 49 +5V

CIO3 P2: 1 PORT C7, 3 PORT C6, 5 PORT C5, 7 PORT C4, 9 PORT C3, 11 PORT C2, 13 PORT C1, 15 PORT C0, 17 PORT B7, 19 PORT B6, 21 PORT B5, 23 PORT B4, 25 PORT B3, 27 PORT B2, 29 PORT B1, 31 PORT B0, 33 PORT A7, 35 PORT A6, 37 PORT A5, 39 PORT A4, 41 PORT A3, 43 PORT A2, 45 PORT A1, 47 PORT A0, 49 +5V

CIO3 P1 CHASSIS 2: 1 PORT C7, 3 PORT C6, 5 PORT C5, 7 PORT C4, 9 PORT C3, 11 PORT C2, 13 PORT C1, 15 PORT C0, 17 PORT B7, 19 PORT B6, 21 PORT B5, 23 PORT B4, 25 PORT B3, 27 PORT B2, 29 PORT B1, 31 PORT B0, 33 PORT A7, 35 PORT A6, 37 PORT A5, 39 PORT A4, 41 PORT A3, 43 PORT A2, 45 PORT A1, 47 PORT A0, 49 +5V

CIO2 P2: 1 PORT C7, 3 PORT C6, 5 PORT C5, 7 PORT C4, 9 PORT C3, 11 PORT C2, 13 PORT C1, 15 PORT C0, 17 PORT B7, 19 PORT B6, 21 PORT B5, 23 PORT B4, 25 PORT B3, 27 PORT B2, 29 PORT B1, 31 PORT B0, 33 PORT A7, 35 PORT A6, 37 PORT A5, 39 PORT A4, 41 PORT A3, 43 PORT A2, 45 PORT A1, 47 PORT A0, 49 +5V

CIO2 P1 CHASSIS 1: 1 PORT C7, 3 PORT C6, 5 PORT C5, 7 PORT C4, 9 PORT C3, 11 PORT C2, 13 PORT C1, 15 PORT C0, 17 PORT B7, 19 PORT B6, 21 PORT B5, 23 PORT B4, 25 PORT B3, 27 PORT B2, 29 PORT B1, 31 PORT B0, 33 PORT A7, 35 PORT A6, 37 PORT A5, 39 PORT A4, 41 PORT A3, 43 PORT A2, 45 PORT A1, 47 PORT A0, 49 +5V

CIO1 P2: 1 PORT C7, 3 PORT C6, 5 PORT C5, 7 PORT C4, 9 PORT C3, 11 PORT C2, 13 PORT C1, 15 PORT C0, 17 PORT B7, 19 PORT B6, 21 PORT B5, 23 PORT B4, 25 PORT B3, 27 PORT B2, 29 PORT B1, 31 PORT B0, 33 PORT A7, 35 PORT A6, 37 PORT A5, 39 PORT A4, 41 PORT A3, 43 PORT A2, 45 PORT A1, 47 PORT A0, 49 +5V

CIO1 P1 CHASSIS 1: 1 PORT C7, 3 PORT C6, 5 PORT C5, 7 PORT C4, 9 PORT C3, 11 PORT C2, 13 PORT C1, 15 PORT C0, 17 PORT B7, 19 PORT B6, 21 PORT B5, 23 PORT B4, 25 PORT B3, 27 PORT B2, 29 PORT B1, 31 PORT B0, 33 PORT A7, 35 PORT A6, 37 PORT A5, 39 PORT A4, 41 PORT A3, 43 PORT A2, 45 PORT A1, 47 PORT A0, 49 +5V

CIO1 P1 connections: CIO5 P2 TO CHASSIS 4; CIO5 P1, CIO4 P2 TO CHASSIS 3; CIO4 P1, CIO3 P2 TO CHASSIS 2; CIO3 P1, CIO2 P2, CIO2 P1, CIO1 P2, CIO1 P1 TO CHASSIS 1

50 PIN FEMALE IDC CONNECTOR MKC50K-ND

TO: TOP SHEET

DOS COMPUTER PORTS: 300x to 32Fx

TERMINATES AT: CONTROL CHASSIS 4 — STEPPER INDEXER 4
TERMINATES AT: CONTROL CHASSIS 3 — STEPPER INDEXER 3
TERMINATES AT: CONTROL CHASSIS 2 — STEPPER INDEXER 2
TERMINATES AT: CONTROL CHASSIS 1 — STEPPER INDEXER 1

MATING CONNECTOR: FUJITSU FCN-217J080-G/O

STEPPER INDEXER 4

MYCOM PPC-2410 — CN 1

STEPPER INDEXER 3

MYCOM PPC-2410 — CN 1

STEPPER INDEXER 2

MYCOM PPC-2410 — CN 1

STEPPER INDEXER 1

MYCOM PPC-2410 — CN 1

CN 1 signal list (pins 1–80):

A CW PULSE +	1	2	
A CW PULSE -	3	4	
A CCW PULSE +	5	6	
A CCW PULSE -	7	8	
A EXCITATION OFF	9	10	
A SERVO ON/OFF	11	12	
A DEVIATION COUNTER RESET	13	14	
A IN POSITION	15	16	
A ALARM	17	18	
A NEAR HOME	19	20	
A FORWARD LIMIT	21	22	
A REVERSE LIMIT	23	24	
A GENERAL PURPOSE INPUT	25	26	
A A-PHASE SIGNAL +	27	28	
A A-PHASE SIGNAL -	29	30	
A B-PHASE SIGNAL +	31	32	
A B-PHASE SIGNAL -	33	34	
A Z-PHASE SIGNAL +	35	36	
A Z-PHASE SIGNAL -	37	38	
B CW PULSE +	39	40	
B CW PULSE -	41	42	
B CCW PULSE +	43	44	
B CCW PULSE -	45	46	
B EXCITATION OFF	47	48	
B SERVO ON/OFF	49	50	
B DEVIATION COUNTER RESET	51	52	
B IN POSITION	53	54	
B ALARM	55	56	
B NEAR HOME	57	58	
B FORWARD LIMIT	59	60	
B REVERSE LIMIT	61	62	
B GENERAL PURPOSE INPUT	63	64	
B A-PHASE SIGNAL +	65	66	
B A-PHASE SIGNAL -	67	68	
B B-PHASE SIGNAL +	69	70	
B B-PHASE SIGNAL -	71	72	
B Z-PHASE SIGNAL +	73	74	
B Z-PHASE SIGNAL -	75	76	
C CW PULSE +	77	78	
C CW PULSE -	79	80	
C CCW PULSE +	81	82	
C CCW PULSE -	83	84	
C EXCITATION OFF	85	86	
C SERVO ON/OFF	87	88	
C DEVIATION COUNTER RESET	89	90	
C IN POSITION	91	92	
C ALARM	93	94	
C NEAR HOME	95	96	
C FORWARD LIMIT	97	98	
C REVERSE LIMIT	99	100	
C GENERAL PURPOSE INPUT	101	102	
C A-PHASE SIGNAL +	103	104	
C A-PHASE SIGNAL -	105	106	
C B-PHASE SIGNAL +	107	108	
C B-PHASE SIGNAL -	109	110	
C Z-PHASE SIGNAL +	111	112	
C Z-PHASE SIGNAL -	113	114	
D CW PULSE +	115	116	
D CW PULSE -	117	118	
D CCW PULSE +	119	120	
D CCW PULSE -	121	122	
D EXCITATION OFF	123	124	
D SERVO ON/OFF	125	126	
D DEVIATION COUNTER RESET	127	128	
D IN POSITION	129	130	
D ALARM	131	132	
D NEAR HOME	133	134	
D FORWARD LIMIT	135	136	
D REVERSE LIMIT	137	138	
D GENERAL PURPOSE INPUT	139	140	
D A-PHASE SIGNAL +	141	142	
D A-PHASE SIGNAL -	143	144	
D B-PHASE SIGNAL +	145	146	
D B-PHASE SIGNAL -	147	148	
D Z-PHASE SIGNAL +	149	150	
D Z-PHASE SIGNAL -	151	152	
EMERGENCY STOP SIGNAL	153	154	
GND FOR ES	155	156	
GND FOR ES	157	158	
GND FOR ES	159	160	

SET ENCODER INPUT TO LINE RECEIVER JP10-13

DISABLE IRQs (ALL OPEN) JP1

SET OUTPUTS TO LINE DRIVER JP6-9

SET OUTPUTS TO PHOTOCOUPLER JP2-5

SET OUTPUTS TO DIFFERENTIAL JP2-5

1CLOCK SET OUTPUTS TO PHOTOCOUPLER JP2-7

2CLOCK SET OUTPUTS TO LINE DRIVER JP6-5

2CLOCK SET OUTPUTS TO PHOTOCOUPLER JP4-5

DEWAR FOCUS MECHANISMS ARE "1 CLOCK"

ON 1 2 3 4 5 6 7 8

ADDRESS D0000 - D1FFF

001101 (STEPPER INDEXER 4) — 101101 (STEPPER INDEXER 3) — 011101 (STEPPER INDEXER 2) — 111101 (STEPPER INDEXER 1)

ISA SLOT 7 — ISA SLOT 6 — ISA SLOT 5 — ISA SLOT 4

26LS31 — JP2-5: 3.9, 2.8, 1.7, 6.12, 5.11, 4.10, 5.7, 6.8; 5V; R1 1K; JP6-9: 1.3, 2.4; R2 330; COMPUTER; Q1 NPN-PHOTO; GND

Indexer Modifications
Mycom PPC-2410 MODS.sch

AXIOM Single Board Computer Model SBC8156 AXIOM Motherboard Model BP20P 15 ISA slots available AXIOM = BSI COMPUTERS 1 800 872-4547

NOTE: See modifications to Indexers, page 72

Carnegie Institution of Washington
The Observatories
813 Santa Barbara Street
Pasadena, California 91101
PHONE (818) 577-1122 FAX (818) 795-8136

IMACS

Title: COMPUTER CHASSIS
Size: C Scale: Drawn By: A. Bagish Revision:
Date: 8-Sep-2003 14:07:35 Checked By: Sheet 3 of 90
File: C:\COCW\Imacs 16 Aug 03\Motion Control System\IMACS Motion Control July 16 2003.DDB - [Documents\IMACS PC.Sch

BACK

TO: IMACS CONTROLLER TOP SHEET

TERMINATES AT: COMPUTER CHASSIS
C8O1 P1

DIO MODULES RACK 1A
IMACS DIO MR1A.Sch

DIO MR1A
MR1A POWER CENTER FIELD DIO MR1A
FILTER SERVER 1 DIO MR1A
MASK SERVER DIO MR1A
CHASSIS 1 BRAKES
HARD STOPS
FILTER SERVER 2 DIO MR1A

5VDC1
5RET1
24VDC1
24RET1

TERMINATES AT: COMPUTER CHASSIS
C8O1 P2

DIO MODULES RACK 1B
IMACS DIO MR1B.Sch

MR1B POWER
DIO MR1B
FILTER SERVER 2 DIO MR1B
MASK SERVER DIO MR1B
CENTER FIELD DIO MR1B
HARD STOPS

5VDC3
5RET2
24VDC1

TERMINATES AT: COMPUTER CHASSIS
C8O2 P3

DIO MODULES RACK 1C
IMACS DIO MR1C.Sch

DIO MR1C
MR1C POWER
MASK SERVER DIO MR1C

5VDC9
5RET7
24VDC24

TERMINATES AT: COMPUTER CHASSIS
STEPPER INDEXER 1

A CW PULSE +	1	2	FS1CWP +
A CW PULSE -	3	4	FS1CWP-
A CCW PULSE +	5	6	FS1CCWP +
A CCW PULSE -	7	8	FS1CCWP -
A EXCITATION OFF	9	10	FS1CO/
A SERVO ON/OFF	11	12	
A DEVIATION COUNTER RESET	13	14	
A IN POSITION	15	16	
A ALARM	17	18	FS1EAL-
A NEAR HOME	19	20	FS1NEAR
A FORWARD LIMIT	21	22	FS1CWL
A REVERSE LIMIT	23	24	FS1CCWL
A GENERAL PURPOSE INPUT	25	26	
A A-PHASE SIGNAL +	27	28	FS1EA+
A A-PHASE SIGNAL -	29	30	FS1EA-
A B-PHASE SIGNAL +	31	32	FS1EB+
A B-PHASE SIGNAL -	33	34	FS1EB-
A Z-PHASE SIGNAL +	35	36	FS1EI+
A Z-PHASE SIGNAL -	37	38	FS1EI-
B CW PULSE +	39	40	MSCWP +
B CW PULSE -	41	42	MSCWP-
B CCW PULSE +	43	44	MSCCWP +
B CCW PULSE -	45	46	MSCCWP -
B EXCITATION OFF	47	48	MSCO/
B SERVO ON/OFF	49	50	
B DEVIATION COUNTER RESET	51	52	
B IN POSITION	53	54	
B ALARM	55	56	
B NEAR HOME	57	58	MSNEAR
B FORWARD LIMIT	59	60	MSCWL
B REVERSE LIMIT	61	62	MSCCWL
B GENERAL PURPOSE INPUT	63	64	
B A-PHASE SIGNAL +	65	66	MSEA+
B A-PHASE SIGNAL -	67	68	MSEA-
B B-PHASE SIGNAL +	69	70	MSEB+
B B-PHASE SIGNAL -	71	72	MSEB-
B Z-PHASE SIGNAL +	73	74	MSEI+
B Z-PHASE SIGNAL -	75	76	MSEI-
C CW PULSE +	77	78	FS2CWP +
C CW PULSE -	79	80	FS2CWP-
C CCW PULSE +	81	82	FS2CCWP +
C CCW PULSE -	83	84	FS2CCWP -
C EXCITATION OFF	85	86	FS2CO/
C SERVO ON/OFF	87	88	
C DEVIATION COUNTER RESET	89	90	
C IN POSITION	91	92	
C ALARM	93	94	FS2EAL-
C NEAR HOME	95	96	FS2NEAR
C FORWARD LIMIT	97	98	FS2CWL
C REVERSE LIMIT	99	100	FS2CCWL
C GENERAL PURPOSE INPUT	101	102	
C A-PHASE SIGNAL +	103	104	FS2EA+
C A-PHASE SIGNAL -	105	106	FS2EA-
C B-PHASE SIGNAL +	107	108	FS2EB+
C B-PHASE SIGNAL -	109	110	FS2EB-
C Z-PHASE SIGNAL +	111	112	FS2EI+
C Z-PHASE SIGNAL -	113	114	FS2EI-
D CW PULSE +	115	116	CFCWP +
D CW PULSE -	117	118	CFCWP-
D CCW PULSE +	119	120	CFCCWP +
D CCW PULSE -	121	122	CFCCWP -
D EXCITATION OFF	123	124	CFCO/
D SERVO ON/OFF	125	126	
D DEVIATION COUNTER RESET	127	128	
D IN POSITION	129	130	
D ALARM	131	132	
D NEAR HOME	133	134	CFNS/
D FORWARD LIMIT	135	136	CFCWLS/
D REVERSE LIMIT	137	138	CFCCWLS/
D GENERAL PURPOSE INPUT	139	140	
D A-PHASE SIGNAL +	141	142	
D A-PHASE SIGNAL -	143	144	
D B-PHASE SIGNAL +	145	146	
D B-PHASE SIGNAL -	147	148	
D Z-PHASE SIGNAL +	149	150	
D Z-PHASE SIGNAL -	151	152	
EMERGENCY STOP SIGNAL	153	154	
GND FOR ES	155	156	GND1
GND FOR ES	157	158	GND2
GND FOR ES	159	160	GND3

ALTERA LOGIC CHASSIS 1
CHASSIS 1 ALTERA LOGIC.Sch

CHASSIS 1 DRIVERS 1-4 CURRENT SHUTOFF FROM INDEXER 1
CHASSIS 1 DRIVERS 1-4 HARD STOPS FROM DIO CARDS
CHASSIS 1 BRAKES
ALTERA LOGIC CHASSIS 1 DC POWER

FILTER SERVSER 1 DRIVER
IMACS Filter 1 Driver.Sch

FILTER SERVER 1 DIO MR1A
FILTER SERVER 1 INDEXER
FILTER SERVER 1 DC POWER
FILTER SERVER 1 AC POWER
FILTER SERVER 1 HARD STOP
FILTER SERVER 1 HARD STOP RET

SLIT MASK DRIVER
IMACS Mask Driver.Sch

MASK SERVER DIO MR1A
MASK SERVER DIO MR1B
MASK SERVER DIO MR1C
MASK SERVER INDEXER
MASK SERVER DC POWER
MASK SERVER AC POWER
MASK SERVER HARD STOP
MASK SERVER HARD STOP RET

FILTER SERVER 2 DRIVER
IMACS Filter 2 Driver.Sch

FILTER SERVER 2 DIO MR1A
FILTER SERVER 2 DIO MR1B
FILTER SERVER 2 INDEXER
FILTER SERVER 2 DC POWER
FILTER SERVER 2 AC POWER
FILTER SERVER 2 HARD STOP
FILTER SERVER 2 HARD STOP RET

CENTER FIELD DRIVER
IMACS CFGC Driver.Sch

CENTER FIELD DIO MR1A
CENTER FIELD DIO MR1B
CENTER FIELD INDEXER
CENTER FIELD DC POWER
CENTER FIELD AC POWER
CENTER FIELD HARD STOP
CENTER FIELD HARD STOP RET

24RET3 — FSIHS
FSIHSRET
MSHS
MSHSRET
FS2HSRET
FS2HS
CHS
CFHSRET
HS1

TB 115VAC
PS115ACH1 A
FS1115ACH
MS115ACH
FS2115ACH
CF115ACH
TB NEUTRAL
PS115ACN1 J
FS1115ACN
MS115ACN
FS2115ACN
CF115ACN
FS1BRAKE (+)
TB 24VDC
24VDC1
24VDC3
CFBRAKE (+)
CFS24VDC
CF24VDC
FS2BRAKE (+)
FS2A24VDC
PS24VDC1 L
MSBRAKE+
MS24VDCA
MS24VDCB
FS1A24VDC
24VDC24
TB 24RET
24RET3
24RET2
CFS24RET
CF24RET
FS2A24RET
PS24RET1 E
MS24RETA
MS24RETB
FS1A24RET
TB 5VDC
5VDC1
5VDC3
5VDC9
FS1M5VDC
ALT5VDC
FS2M5VDC
PS5VDC1 C
GROUND STAR
CFCO+
FS2CO+
FS1CO+
TB 5RET
5RET1
5RET2
FS1M5RET
ALT5RET
FS2M5RET
5RET7
PS5RET1 D
GND4
GND5
GND6
GND1
GND2
GND3
MSE5RET
FS1E5RET
FS2E5RET

N.C. F N.C.
HS1 H
N.C. B N.C.
N.C. K N.C.
EARTH1 G

PSJ5
BENDIX PT SERIES 1
PT06A-18-11S(SR) PT02A-18-11P

TERMINATES AT: POWER SUPPLY CHASSIS
CHASSIS 1 POWER

Carnegie Institution of Washington
The Observatories
813 Santa Barbara Street
Pasadena, California 91101
PHONE (818) 577-1122 FAX (818) 795-8136

IMACS

Title: CONTROL CHASSIS 1

Size: C	Scale:	Drawn By: A. Bagish	Revision:
Date: 8-Sep-2003 14:07:37		Checked By:	Sheet 4 of 90

File: C:\OCIW\Imacs 16 Aug 03\Motion Control System\IMACS Motion Control July 16 2003.DDB - Documents\IMACS Chassis 1.Sch

BACK

5

TO: CONTROL CHASSIS 1

TO: IMAC Chassis 1.Sch

MR1A

SNAP-D6M

TERMINATES AT: CONTROL CHASSIS 1
MR1A POWER
5VDC1
5RET1
24VDC3
24RET2

TERMINATES AT: COMPUTER CHASSIS
CIO1 P1
GND
+5V
A0 A1 A2 A3 A4 A5 A6 A7 B0 B1 B2 B3 B4 B5 B6 B7 C0 C1 C2 C3 C4 C5 C6 C7

J1
NC
A0 A1 A2 A3 A4 A5 A6 A7 B0 B1 B2 B3 B4 B5 B6 B7 C0 C1 C2 C3 C4 C5 C6 C7

MR1A 0-3
SNAP-IDC5
+5
5 RET
D0 D1 D2 D3
CH0 CH1 CH2 CH3
A0 A1 A2 A3
FS1ELA/
24VDC3
FS1ELB/
FS1RLA/
FS1RLB/

MR1A 4-7
SNAP-IDC5
A4 A5 A6 A7
FS1CWHS/
FS1CCWHS/
MSTRL/
MSTEL/

MR1A 8-11
SNAP-ODC5SNK
OUTPUT COMMON -
CH0 - CH1 - CH2 - CH3 -
B0 B1 B2 B3
24RET2
MSBRAKE (-)2
FS1BRAKE(-)2
FS2BRAKE (-)2
CFBRAKE (-)2

MR1A 12-15
SNAP-ODC5SRC
OUTPUT COMMON +
CH0 - CH1 - CH2 - CH3 -
B4 B5 B6 B7
FS1SVR
FS1SVE
MSTVE
MSTVR

MR1A 16-19
SNAP-ODC5SRC
C0 C1 C2 C3
MSLVR
MSLVE
FS2SVR
FS2SVE

MR1A 20-23
SNAP-IDC5
C4 C5 C6 C7
MSLEL/
MSLRL/
MSCCWHS/
MSCWHS/

TERMINATES AT: FILTER SERVER 1
FILTER SERVER 1 DIO MR1A

TERMINATES AT: MASK SERVER
MASK SERVER DIO MR1A

TERMINATES AT: FILTER SERVER 2
FILTER SERVER 2 DIO MR1A

CENTER FIELD DIO MR1A

SNAP-IDC5: 4 Channel DC Input 10-32VDC 5VDC Logic

SNAP-ODC5SNK: 4 Channel DC Output 5-60VDC 5VDC Logic Sink

SNAP-ODC5SRC: 4 Channel DC Output 5-60VDC 5VDC Logic Source

TURN ON TO RELEASE BRAKE

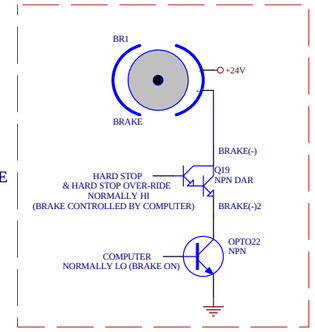

Carnegie Institution of Washington
The Observatories
813 Santa Barbara Street
Pasadena, California 91101
PHONE (818) 577-1122 FAX (818) 795-8136

IMACS

Title: Opto22 Module Rack 1A

Size: C	Scale:	Drawn By: A. BAGISH	Revision:
Date: 8-Sep-2003 14:07:38		Checked By:	Sheet 5 of 90

File: C:\OCIW\Imacs 16 Aug 03\Motion Control Systems\IMACS Motion Control July 16 2003.DDB - Documents\IMACS DIO MR1A.Sch

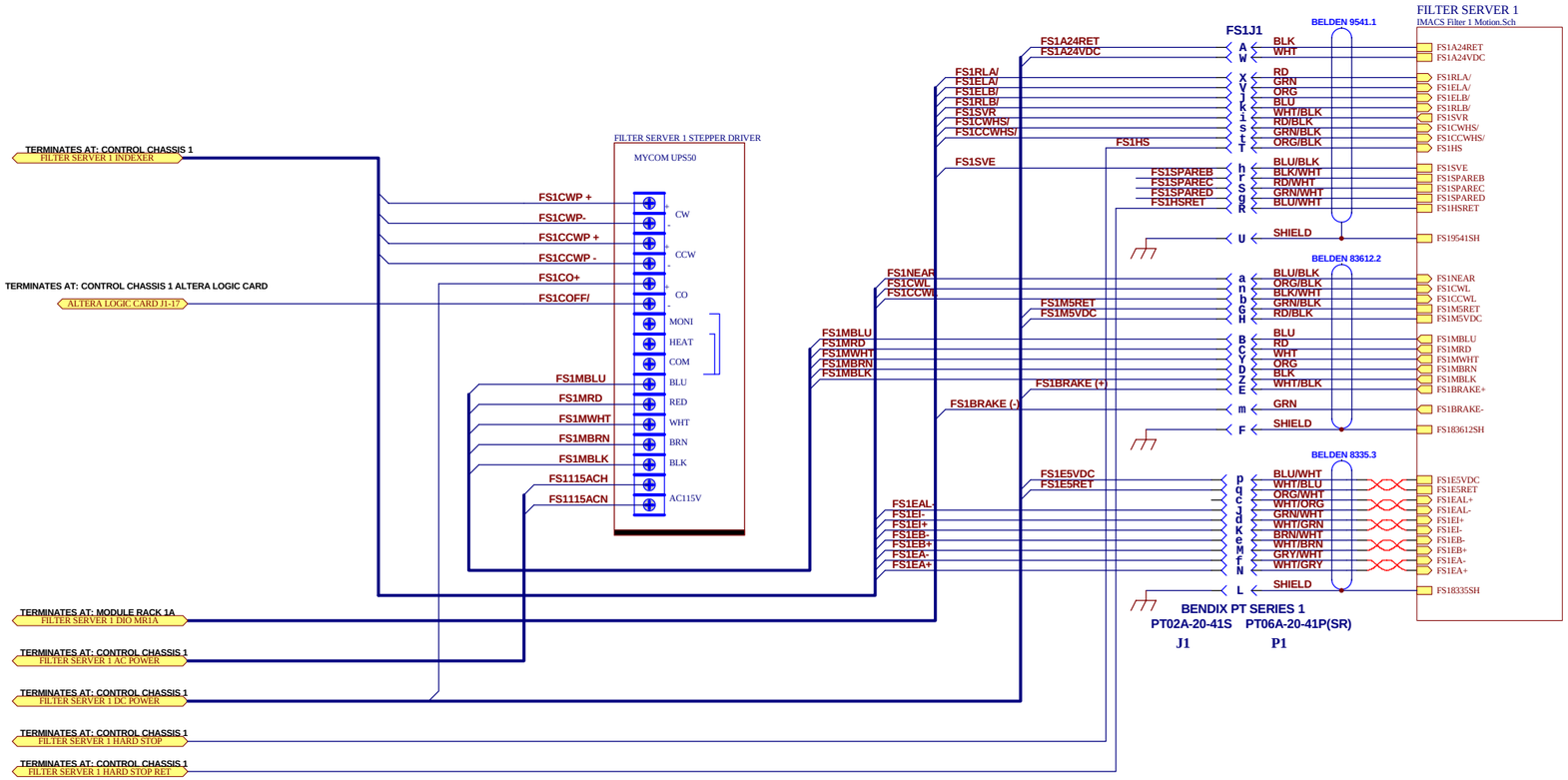

Carnegie Institution of Washington
The Observatories
813 Santa Barbara Street
Pasadena, California 91101
PHONE (818) 577-1122 FAX (818) 795-8136

IMACS

Title: FILTER SERVER 1 DRIVER

Size: C	Scale:	Drawn By: A. BAGISH	Revision:
Date: 8-Sep-2003 14:07:38		Checked By:	Sheet 6 of 90

File: C:\OCIW\Imacs 16 Aug 03\Motion Control System\IMACS Motion Control July 16 2003.DDB - Documents\IMACS Filter 1 Driver.Sch

TO: FILTER SERVER 1 CONTROL ELECTRONICS

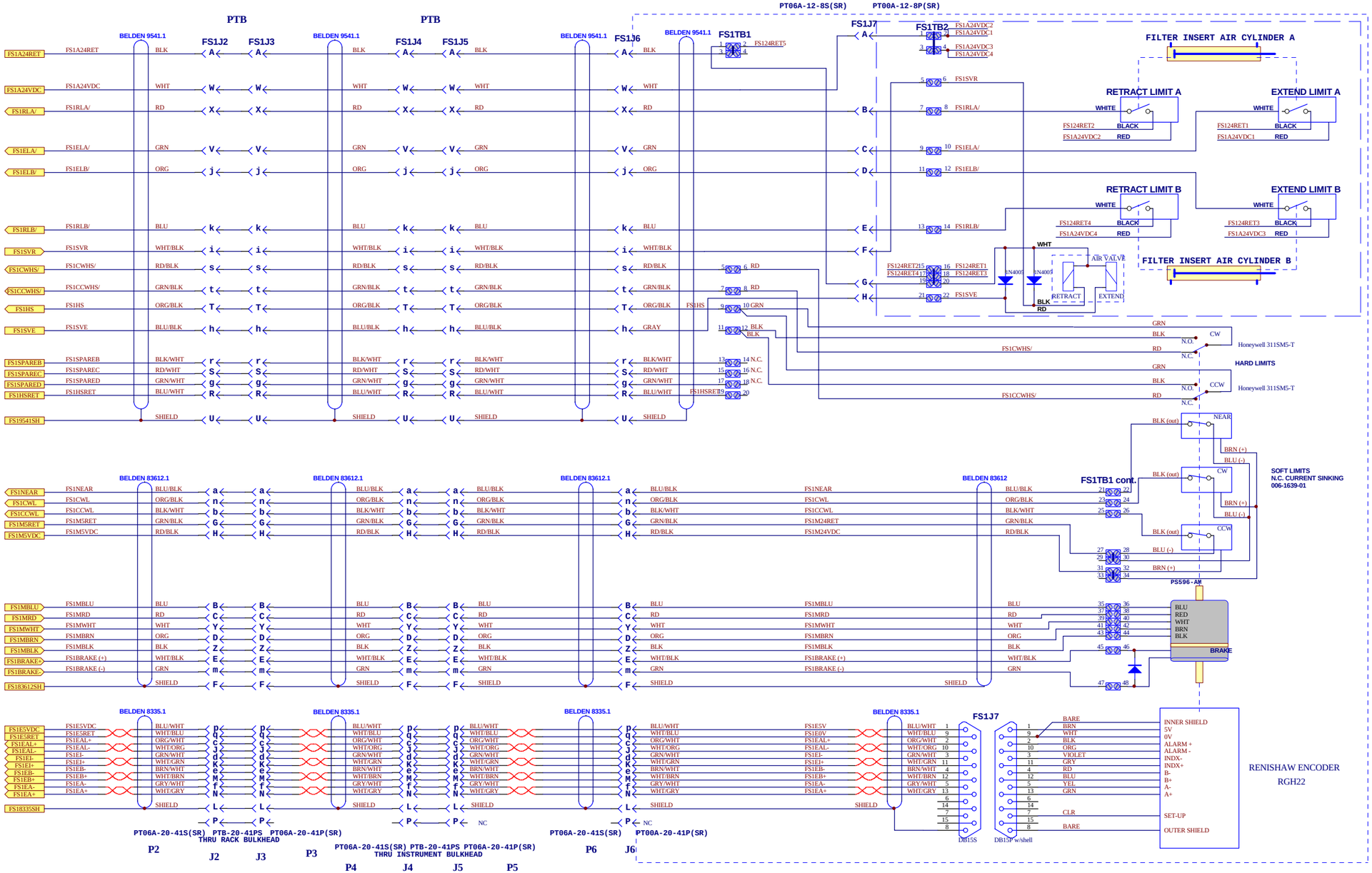

Carnegie Institution of Washington
The Observatories
813 Santa Barbara Street
Pasadena, California 91101
PHONE (818) 577-1122 FAX (818) 795-8136

IMACS

Title: FILTER SERVER 1

Size:	Scale:	Drawn By:	Revision:
C		A. BAGISH	
Date: 8-Sep-2003 14:07:38		Checked By:	Sheet 7 of 90

File: C:\OCIW\Imacs 16 Aug 03\Motion Control System\IMACS Motion Control July 16 2003.DDB - Documents\IMACS Filter 1 Motion.Sch

BACK

TO: CONTROL CHASSIS 1

TO: CONTROL CHASSIS 1

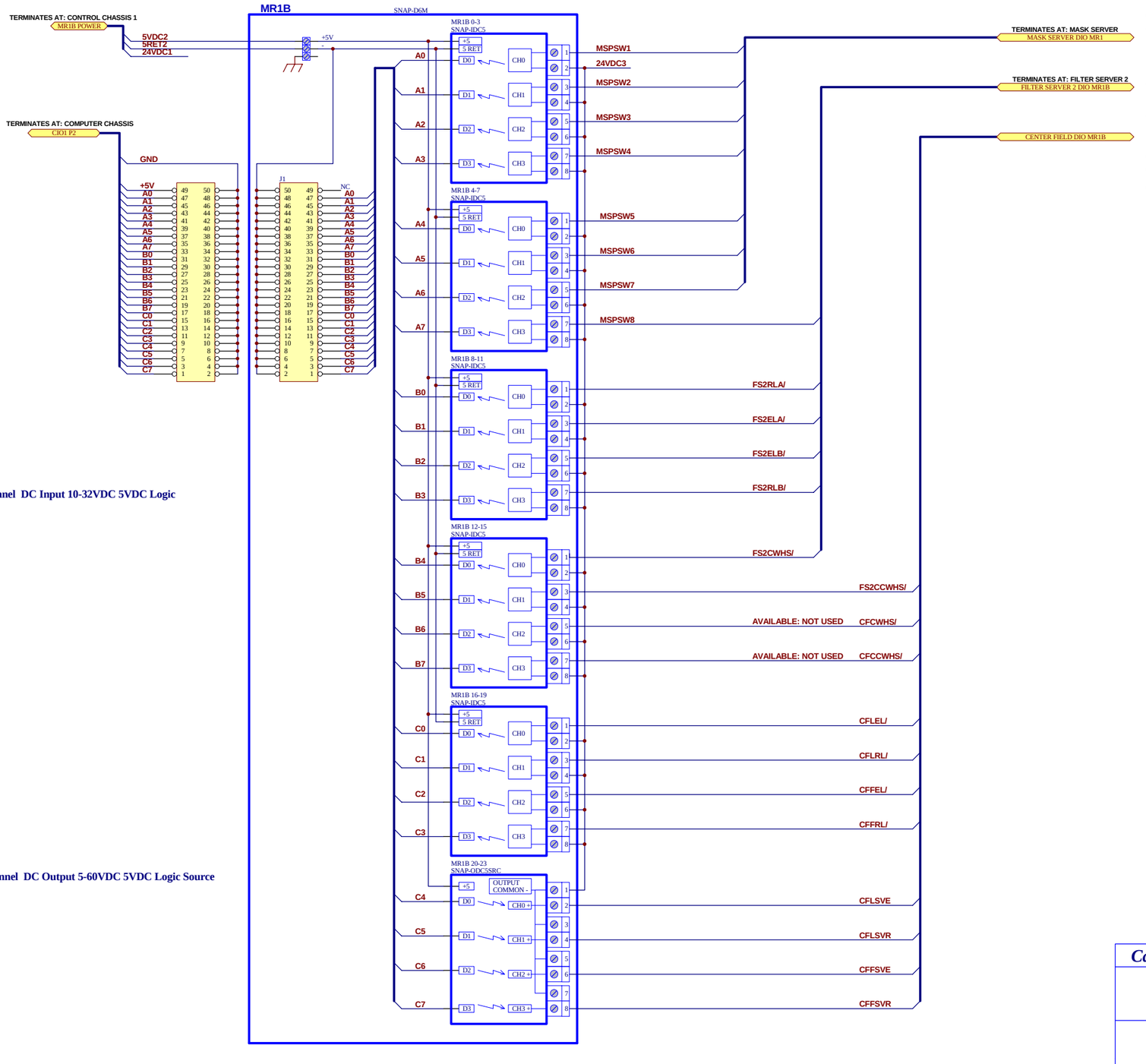

SNAP-IDC5: 4 Channel DC Input 10-32VDC 5VDC Logic

SNAP-ODC5SRC: 4 Channel DC Output 5-60VDC 5VDC Logic Source

Carnegie Institution of Washington
The Observatories
813 Santa Barbara Street
Pasadena, California 91101
PHONE (818) 577-1122 FAX (818) 795-8136

IMACS

Title: Opto22 Module Rack 1B

Size: C	Scale:	Drawn By: A. BAGISH	Revision:
Date: 8-Sep-2003 14:07:29		Checked By:	Sheet 8 of 90

File: C:\OCIW\Imacs 16 Aug 03\Motion Control System\IMACS Motion Control July 16 2003.DDB - Documents\IMACS DIO MR1B.Sch

BACK

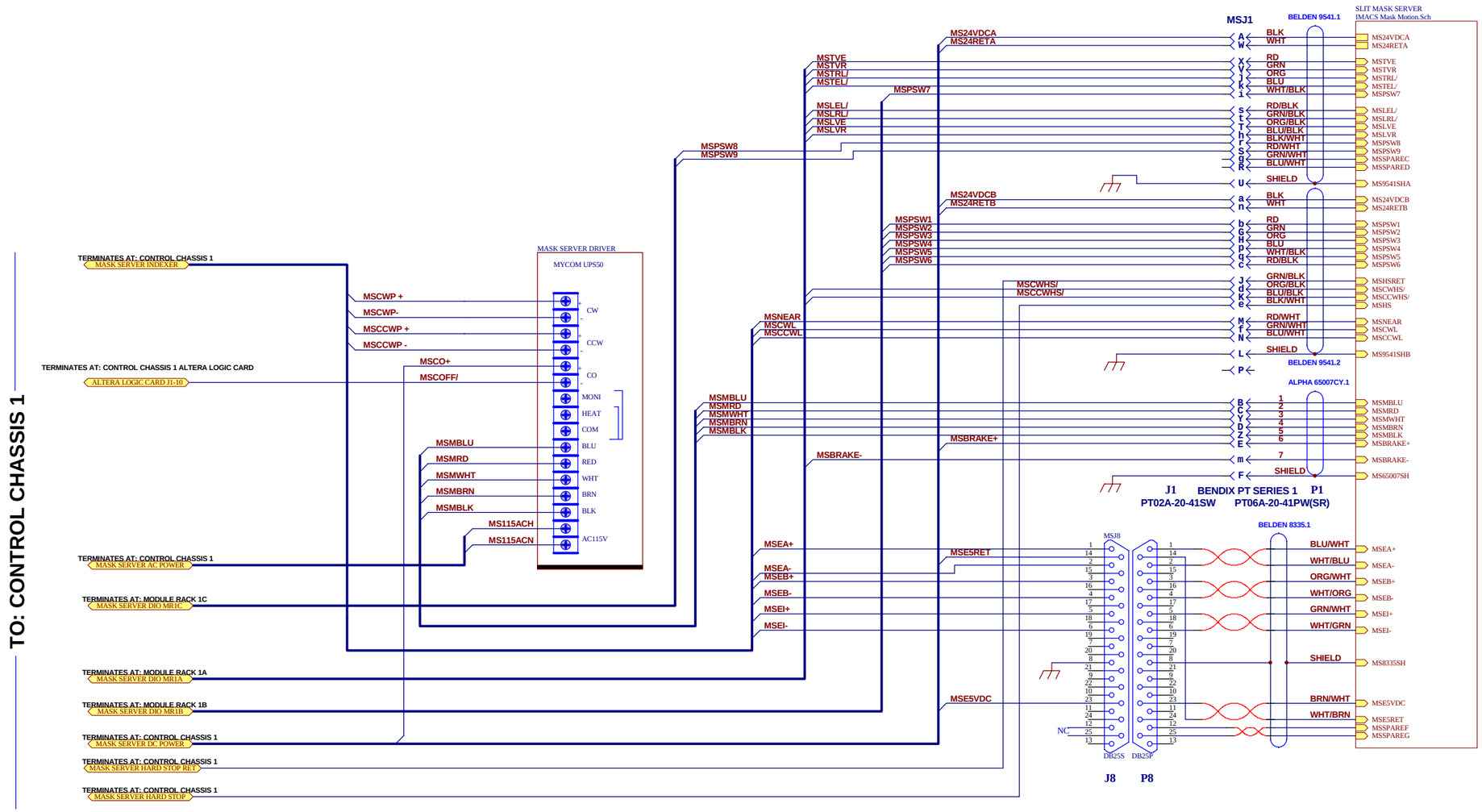

Carnegie Institution of Washington
The Observatories
813 Santa Barbara Street
Pasadena, California 91101
PHONE (818) 577-1122 FAX (818) 795-8136

IMACS

Title: SLIT MASK DRIVER

Size: C	Scale:	Drawn By: A. BAGISH	Revision:
Date: 8-Sep-2003 14:07:39		Checked By:	Sheet 9 of 90

File: C:\OCIW\Imacs 16 Aug 03\Motion Control System\IMACS Motion Control July 16 2003.DDB - Documents\IMACS Mask Driver.Sch

BACK

TO: SLIT MASK CONTROL ELECTRONICS

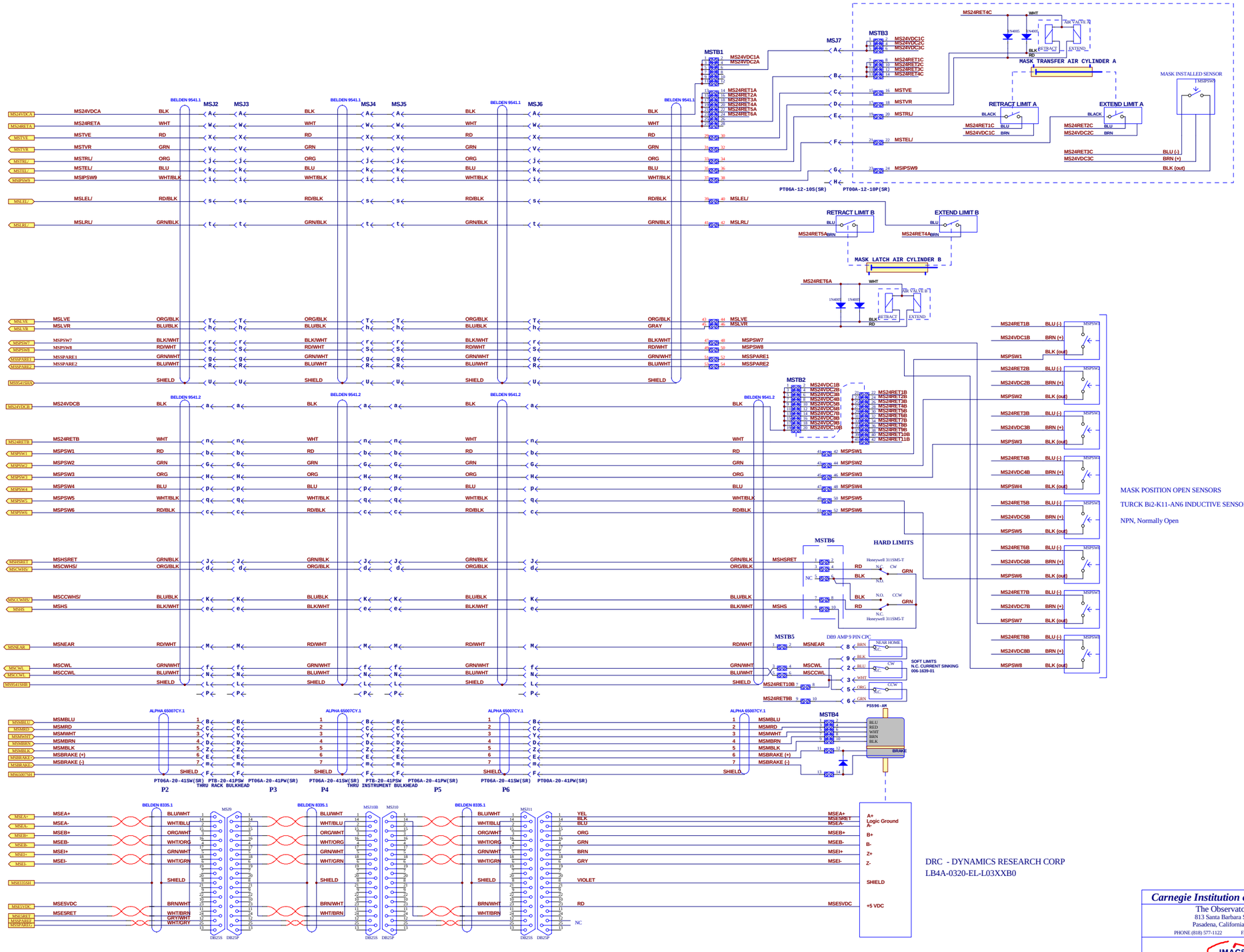

MASK POSITION OPEN SENSORS

TURCK Bi2-K11-AN6 INDUCTIVE SENSOR

NPN, Normally Open

DRC - DYNAMICS RESEARCH CORP
LB4A-0320-EL-L03XXB0

Carnegie Institution of Washington
The Observatories
813 Santa Barbara Street
Pasadena, California 91101
PHONE (818) 577-1122 FAX (818) 795-8136

IMACS

Title: SLIT MASK SERVER

Size: C	Scale:	Drawn By: A. Bagish	Revision:
Date: 8-Sep-2003 14:07:40		Checked By:	Sheet 10 of 90

File: C:\COEW\Imacs 16 Aug 03\Motion Control System\IMACS Motion Control July 16 2003.DDB - Documents\IMACS Mask Motion.Sch

BACK

TO: CONTROL CHASSIS 1

TERMINATES AT: CONTROL CHASSIS 1 ALTERA LOGIC CARD
ALTERA LOGIC CARD J1-3

FILTER SERVER 2 STEPPER DRIVER
MYCOM UPS50

FS2CWP +
FS2CWP-
FS2CCWP +
FS2CCWP -
FS2CO+
FS2COFF/
FS2MBLU
FS2MRD
FS2MWHT
FS2MBRN
FS2MBLK
FS2115ACH
FS2115ACN

CW
CCW
CO
MONI
HEAT
COM
BLU
RED
WHT
BRN
BLK
AC115V

TERMINATES AT: CONTROL CHASSIS 1
FILTER SERVER 2 INDEXER

TERMINATES AT: MODULE RACK 1B
FILTER SERVER 2 DIO MR1B

TERMINATES AT: MODULE RACK 1A
FILTER SERVER 2 DIO MR1A

TERMINATES AT: CONTROL CHASSIS 1
FILTER SERVER 2 AC POWER

TERMINATES AT: CONTROL CHASSIS 1
FILTER SERVER 2 DC POWER

TERMINATES AT: CONTROL CHASSIS 1
FILTER SERVER 2 HARD STOP

TERMINATES AT: CONTROL CHASSIS 1
FILTER SERVER 2 HARD STOP RET

FS2J1

FS2A24RET
FS2A24VDC
FS2RLA/
FS2ELA/
FS2ELB/
FS2RLB/
FS2CWHS/
FS2CCWHS/
FS2SVR
FS2HS
FS2SVE
FS2SPAREB
FS2SPAREC
FS2SPARED
FS2HSRET
FS2NEAR
FS2CWL
FS2CCWL
FS2M5RET
FS2M5VDC
FS2MBLU
FS2MRD
FS2MWHT
FS2MBRN
FS2MBLK
FS2BRAKE (+)
FS2BRAKE (-)
FS2E5VDC
FS2E5RET
FS2EAL-
FS2EI-
FS2EI+
FS2EB-
FS2EB+
FS2EA-
FS2EA+

1 BELDEN 9541
BLK
WHT
RD
GRN
ORG
BLU
WHT/BLK
RD/BLK
GRN/BLK
ORG/BLK
BLU/BLK
BLK/WHT
RD/WHT
GRN/WHT
BLU/WHT
SHIELD

2 BELDEN 83612
BLU/BLK
ORG/BLK
BLK/WHT
GRN/BLK
RD/BLK
BLU
RD
WHT
ORG
BLK
WHT/BLK
GRN
SHIELD

3 BELDEN 8335
BLU/WHT
WHT/BLU
ORG/WHT
WHT/ORG
GRN/WHT
WHT/GRN
BRN/WHT
WHT/BRN
GRY/WHT
WHT/GRY
SHIELD

FILTER SERVER 2
IMACS Filter 2 Motion.Sch

FS2A24RET
FS2A24VDC
FS2RLA/
FS2ELA/
FS2ELB/
FS2RLB/
FS2VR
FS2CWHS/
FS2CCWHS/
FS2HS
FS2SVE
FS2SPAREB
FS2SPAREC
FS2SPARED
FS2HSRET
FS29541SH
FS2NEAR
FS2CWL
FS2CCWL
FS2M5RET
FS2M5VDC
FS2MBLU
FS2MRD
FS2MWHT
FS2MBRN
FS2MBLK
FS2BRAKE+
FS2BRAKE-
FS283612SH
FS2E5VDC
FS2E5RET
FS2EAL+
FS2EAL-
FS2EI+
FS2EI-
FS2EB-
FS2EB+
FS2EA-
FS2EA+
FS28335SH

BENDIX PT SERIES 1
PT02A-20-41SX PT06A-20-41PX(SR)
J1 P1

Carnegie Institution of Washington
The Observatories
813 Santa Barbara Street
Pasadena, California 91101
PHONE (818) 577-1122 FAX (818) 795-8136

IMACS

Title: FiLTER SERVER 2 DRIVER

Size: C	Scale:	Drawn By: A. BAGISH	Revision:
Date: 8-Sep-2003 14:07:41		Checked By:	Sheet 11 of 90

File: C:\OCIW\Imacs 16 Aug 03\Motion Control Systems\IMACS Motion Control July 16 2003.DDB - Documents\IMACS Filter 2 Driver.Sch

BACK

12

TO: FILTER SERVER 2 CONTROL ELECTRONICS

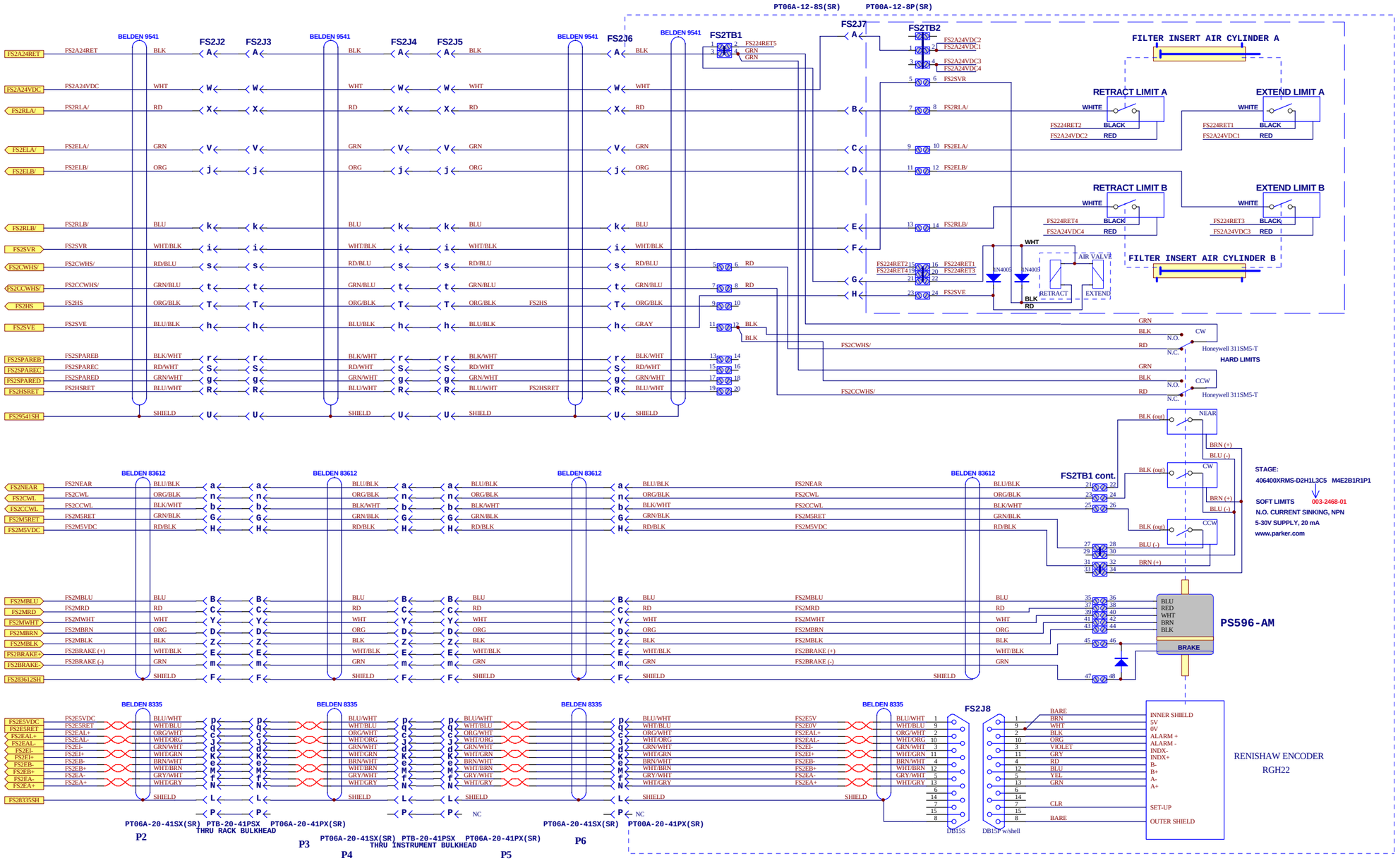

http://www.parker.com/frameless/Default.asp?type=1&id=10&PSID=5508&PJID=0&GID=10&DivID=0&FamID=0&RelPSID=&TechID=2&BulkID=&TypeID=8

Carnegie Institution of Washington
The Observatories
813 Santa Barbara Street
Pasadena, California 91101
PHONE (818) 577-1122 FAX (818) 795-8136

IMACS

Title: FILTER SERVER 2

Size: C	Scale:	Drawn By: A. BAGISH	Revision:
Date: 8-Sep-2003 14:07:41		Checked By:	Sheet 12 of 90

File: C:\OCIW\Imacs 16 Aug 03\Motion Control Systems\IMACS Motion Control July 16 2003.DDB - Documents\IMACS Filter 2 Motion.Sch

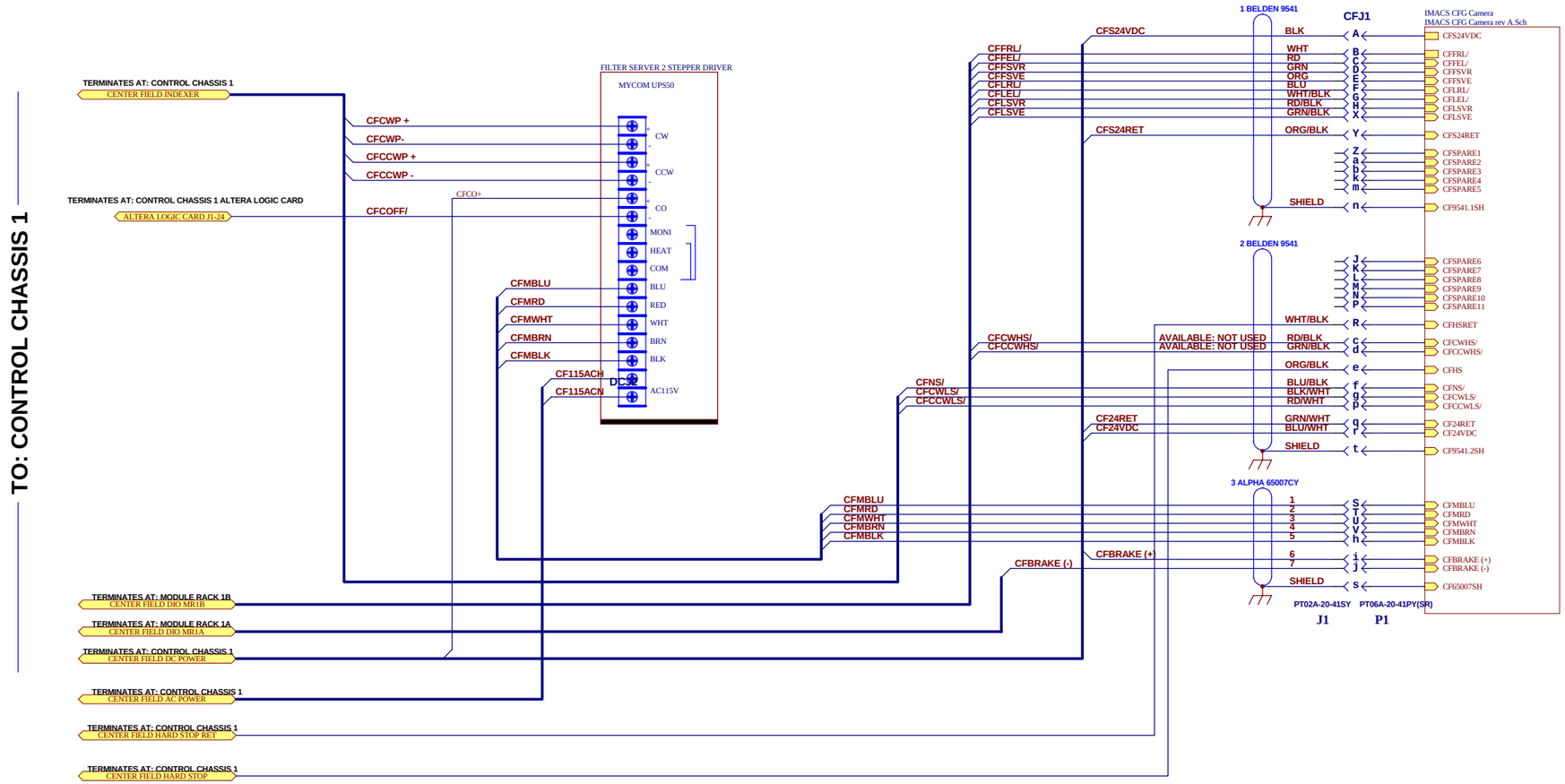

Carnegie Institution of Washington
The Observatories
813 Santa Barbara Street
Pasadena, California 91101
PHONE (818) 577-1122 FAX (818) 795-8136

IMACS

Title: CENTER FIELD GUIDE DRIVER

Size: C	Scale:	Drawn By: A. BAGISH	Revision:
Date: 8-Sep-2003 14:07:42		Checked By:	Sheet 13 of 90

File: C:\OCIW\Imacs 16 Aug 03\Motion Control Systems\IMACS Motion Control July 16 2003.DDB - Documents\IMACS CFGC Driver.Sch

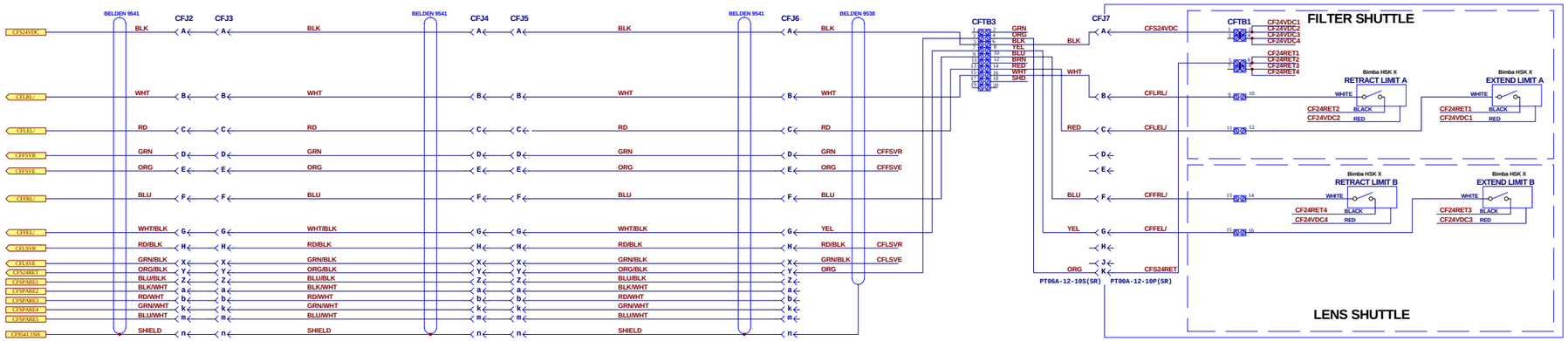

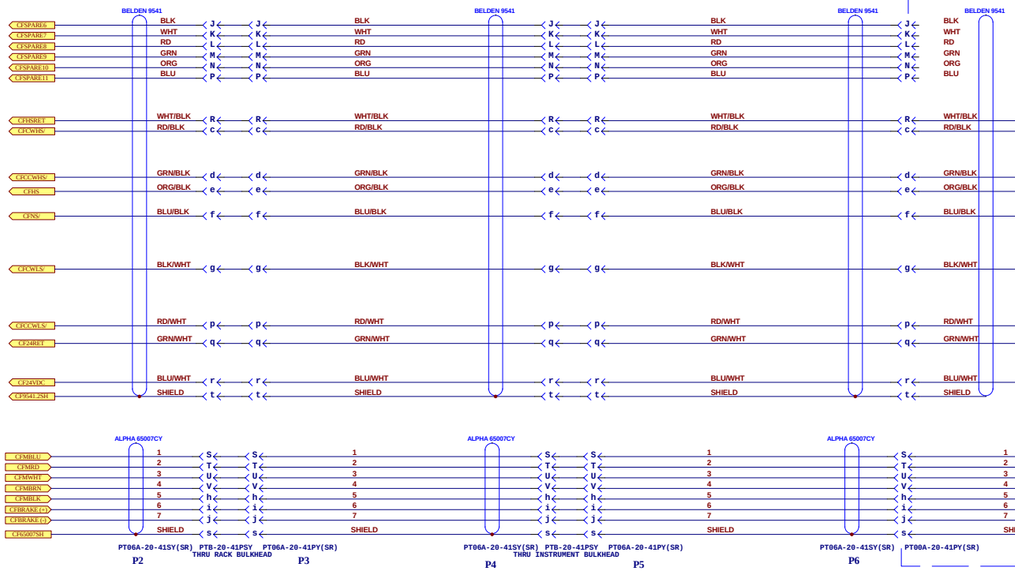

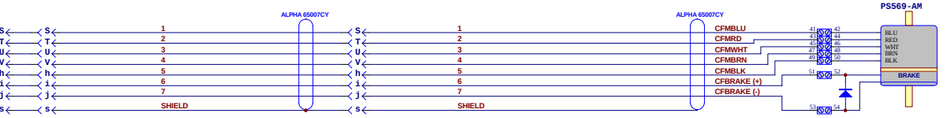

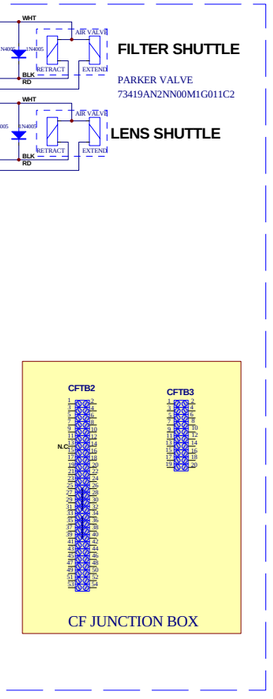

Carnegie Institution of Washington
The Observatories
813 Santa Barbara Street
Pasadena, California 91101
PHONE (818) 577-1122 FAX (818) 795-8136

IMACS

Title: Center Field Guide Camera

Size: C	Scale:	Drawn By: A. Bagish	Revision: A
Date: 8-Sep-2003 14:07:42		Checked By:	Sheet 14 of 90

File: C:\OCIW\Imacs 16 Aug 03\Motion Control System\IMACS Motion Control July 16 2003.DDB - Documents\IMACS CFG Camera rev A.Sch

TO: CONTROL CHASSIS 1

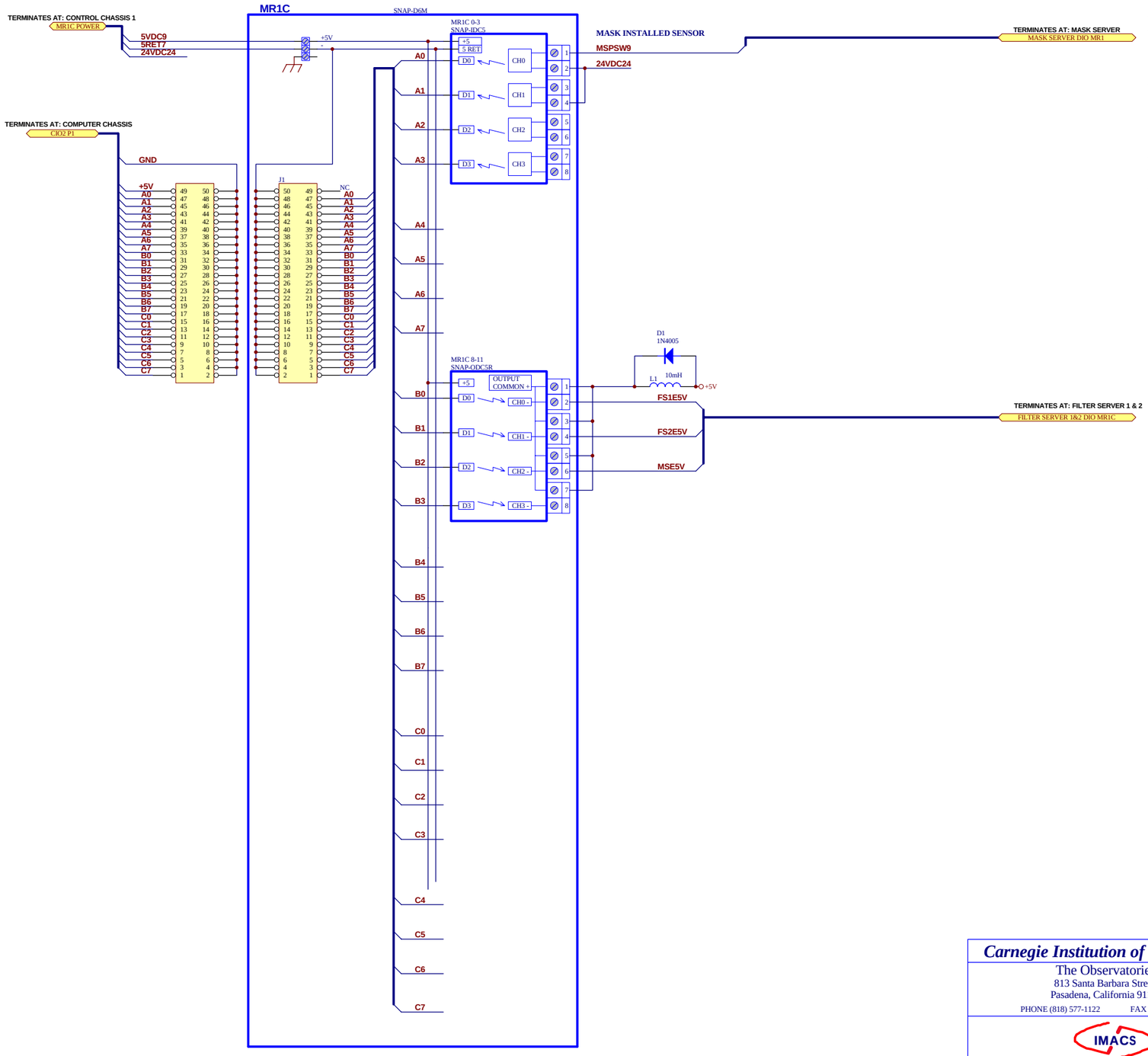

TO: CONTROL CHASSIS 1

Carnegie Institution of Washington
The Observatories
813 Santa Barbara Street
Pasadena, California 91101
PHONE (818) 577-1122 FAX (818) 795-8136

IMACS

Title: Opto22 Module Rack 1C

Size: C	Scale:	Drawn By: A. BAGISH	Revision:
Date: 8-Sep-2003 14:07:43		Checked By:	Sheet 15 of 90

File: C:\OCIW\Imacs 16 Aug 03\Motion Control System\IMACS Motion Control July 16 2003.DDB - Documents\IMACS DIO MR1C.Sch

BACK

24V TO TTL

LOGIC INVERSION CURRENT SINK DIGIKEY 767-141-R3.3K-ND NET 14PIN SMD

DIGIKEY 767-143-R15K-ND ISOLATED 14PIN SMD

CFCWHS/ J1-32 — R4A 15K — Q1 2SD1277 — R5A 3.3K — CFCWHS24/ — +5V

NORMALLY LO

+24V — R9A 1.8K

DIGIKEY 750-83-R1.8K-ND ISOLATED 8 PIN SIP PIN 1 RES 1

CFCCWHS/ J1-34 — R4B 15K — Q2 2SD1277 — R5B 3.3K — CFCCWHS24/ — +5V

+24V — R9B 1.8K

FS1CWHS/ J1-5 — R4C 15K — Q3 2SD1277 — R5C 3.3K — FS1CWHS24/ — +5V

+24V — R9C 1.8K

FS1CCWHS/ J1-7 — R4D 15K — Q4 2SD1277 — R5D 3.3K — FS1CCWHS24/ — +5V

+24V — R9D 1.8K

FS2CWHS/ J1-14 — R4E 15K — Q5 2SD1277 — R5E 3.3K — FS2CWHS24/ — +5V

+24V — R10A 1.8K

FS2CCWHS/ J1-16 — R4F 15K — Q6 2SD1277 — R5F 3.3K — FS2CCWHS24/ — +5V

+24V — R10B 1.8K

DIGIKEY 767-143-R15K-ND

MSCWHS/ J1-23 — R6A 15K — Q7 2SD1277 — R5G 3.3K — MSCWHS24/ — +5V

+24V — R10C 1.8K

DIGIKEY 750-83-R1.8K-ND

MSCCWHS/ J1-25 — R6B 15K — Q8 2SD1277 — R5H 3.3K — MSCCWHS24/ — +5V

+24V — R10D 1.8K

IN1_24V SPARE FROM J1-75 — R6C 15K — Q9 2SD1277 — R5I 3.3K — +5V

+24V — R11A 1.8K

IN2_24V SPARE FROM J1-76 — R6D 15K — Q10 2SD1277 — R5J 3.3K — +5V

+24V — R11B 1.8K

IN3_24V SPARE FROM J1-77 — R6E 15K — Q11 2SD1277 — R5K 3.3K — +5V

+24V — R11C 1.8K

IN4_24V SPARE FROM J1-78 — R6F 15K — Q12 2SD1277 — R5L 3.3K — +5V

+24V — R11D 1.8K

FROM ALTERA NORMALLY LO (BRAKE ON)

LIMIT SWITCHES
NORMALLY HI

+24V — R 1K — OPTO22 INPUT SNAP-IDC5 — HS — SW SPST NC

2SD1277 (TOP VIEW): C, E, B — B C E

TTL TO 24V

24V CURRENT SINK

DIGIKEY 767-143-R3.9K-ND ISOLATED 14PIN SMD

CFBRAKE U1-79 — R7A 470 — Q13 2SD1277 — CFBRAKE(-) — J1-35

CFBRAKE(-)2 — J1-36 TO OPTO22 MODULE RACK 3A M8-11.2

FS1BRAKE U1-73 — R7B 470 — Q14 2SD1277 — FS1BRAKE(-) — J1-8

FS1BRAKE(-)2 — J1-9 TO OPTO22 MODULE RACK 3A M8-11.4

FS2BRAKE U1-76 — R7C 470 — Q15 2SD1277 — FS2BRAKE(-) — J1-17

FS2BRAKE(-)2 — J1-18 TO OPTO22 MODULE RACK 3A M8-11.6

MSBRAKE U1-80 — R7D 470 — Q16 2SD1277 — MSBRAKE(-) — J1-26

MSBRAKE(-)2 — J1-27 TO OPTO22 MODULE RACK 3B M16-19.2

BRAKES CONSUME 170 mA CUURENT WHEN RELEASED
FAILSAFE BRAKE: ON WHEN NOT ENERGIZED
NORMALLY HI (BRAKE ON)

OUTPUT IS IN SERIES WITH OPTO22 SINK MODULE

TO J1-39 — J1 2 — SPARE FROM ALTERA — R7E 470 — Q17 2SD1277 — OUT1_24V — SPARE TO J1-71

OUT1_24V2 — SPARE TO J1-72

TO J1-40 — J1 3 — SPARE FROM ALTERA — R7F 470 — Q18 2SD1277 — OUT2_24V — SPARE TO J1-73

OUT2_24V2 — SPARE TO J1-74

+5V — C12 1uF — R8E 3.3K — POR

R8A 3.3K — FS1CO/

R8B 3.3K — FS2CO/

R8C 3.3K — MSCO/

R8M 3.3K — CFCO/

DIGIKEY 767-141-R3.3K-ND NET 14PIN SMD

J1

1	DGND	
2	FS1CO/	⟷ FROM INDEXER TO DRIVER
3	FS1COFF/	⟷ FROM INDEXER TO DRIVER
4	FS1CWHS24/	
5	FS1CWHS/	
6	FS1CCWHS24/	
7	FS1CCWHS/	
8	FS1BRAKE(-)	FROM BRAKE TO OPTO 22
9	FS1BRAKE(-)2	FROM BRAKE TO OPTO 22
10	FS1OVRD/ SW1	
11	FS2CO/	⟷ FROM INDEXER TO DRIVER
12	FS2COFF/	⟷ FROM INDEXER TO DRIVER
13	FS2CWHS24/	
14	FS2CWHS/	
15	FS2CCWHS24/	
16	FS2CCWHS/	
17	FS2BRAKE(-)	FROM BRAKE TO OPTO 22
18	FS2BRAKE(-)2	FROM BRAKE TO OPTO 22
19	FS2OVRD/ SW2	
20	MSCO/	⟷ FROM INDEXER TO DRIVER
21	MSCOFF/	⟷ FROM INDEXER TO DRIVER
22	MSCWHS24/	
23	MSCWHS/	
24	MSCCWHS24/	
25	MSCCWHS/	
26	MSBRAKE(-)	FROM BRAKE TO OPTO 22
27	MSBRAKE(-)2	FROM BRAKE TO OPTO 22
28	MSOVRD/ SW3	
29	CFCO/	⟷ FROM INDEXER TO DRIVER
30	CFCOFF/	⟷ FROM INDEXER TO DRIVER
31	CFCWHS24/	
32	CFCWHS/	
33	CFCCWHS24/	
34	CFCCWHS/	
35	CFBRAKE(-)	FROM BRAKE TO OPTO 22 — CFBRAKE(-)
36	CFBRAKE(-)2	CFBRAKE(-)2
37	CFOVRD/ SW4	
38	POR	
39	2	
40	3	
41	4	
42	5	
43	6	
44	7	
45	8	
46	9 FS1HS/	
47	10 FS2HS/	
48	11 MSHS/	
49	12	
50	13 CFHS/	
51	14	
52	15	
53	16	
54	17	
55	18	
56	19	
57	20	
58	21	
59	22	
60	23	
61	24	
62	25	
63	26	
64	27	
65	28	
66	29	
67	30	
68	31	
69	32	
70	36	37, 38
71	OUT1_24V	SPARE LEVEL SHIFTER 5V TO 24V
72	OUT1_24V2	
73	OUT2_24V	SPARE LEVEL SHIFTER 5V TO 24V
74	OUT2_24V2	
75	IN1_24V	SPARE LEVEL SHIFTER 24V TO 5V
76	IN2_24V	SPARE LEVEL SHIFTER 24V TO 5V
77	IN3_24V	SPARE LEVEL SHIFTER 24V TO 5V
78	IN4_24V	SPARE LEVEL SHIFTER 24V TO 5V
79		
80	+5V	

PHOENIX80

NOT USED (NO BRAKE ON CFG)

TO HARDSTOP LED'S

SPARE ALTERA I/O

FRONT PANEL OVER-RIDE SWITCHES

SW1 FS1OVRD/ — R8L 3.3K — J1-25 — +5V

SW2 FS2OVRD/ — R8I 3.3K — J1-9 — +5V

SW3 MSOVRD/ — R8J 3.3K — J1-17 — +5V

SW4 CFOVRD/ — R8K 3.3K — J1-33 — +5V

BR1 — BRAKE — +24V — BRAKE(-)

HARD STOP & HARD STOP OVER-RIDE NORMALLY HI (BRAKE CONTROLLED BY COMPUTER) — Q19 NPN DAR — BRAKE(-)2

COMPUTER NORMALLY LO (BRAKE ON) — Q20 NPN

U1 — CHECKSUM = 001DBEFF — ALTERA EPM7128SLC84-7

C1 0.1uF — FS2CWHS24/ 12
+5V 13
TDI 14
FS1OVRD/ 15
2 16
FS2CCWHS24/ 17
CFCCWHS24/ 18
DGND 19
CFCO/ 20
CFCWHS24/ 21
3 22
TMS 23
4 24
5 25
+5V 26
CFOVRD/ 27
6 28
MSOVRD/ 29
7 30
8 31
DGND 32

C2 0.1uF

C3 0.1uF — C4 0.1uF — C6 0.1uF — C7 0.1uF — C8 0.1uF — C9 22uF — C5 0.1uF

FS1CWHS24 10 — FS1CCWHS24 9 — MSCO/ 8 — FS1CO/ 7 — FS1CCWHS24/ 6 — FS2CO/ 5 — MSCWHS24/ 4 — +5V 3 — DGND 2 — POR 1 — DGND 84 — FS2CWHS24/ 83 — FS2CCWHS24/ 82 — FS2OVRD/ 81 — FS2BRAKE 80 — MSBRAKE 79 — CFHBRAKE 78 — +5V 77 — CFCOFF/ 76 — FS1BRAKE 75 — CFCOFF/ 74

I/O VCCIO TDI I/O I/O I/O I/O GND I/O I/O I/O I/O TMS I/O I/O VCCIO I/O I/O I/O I/O I/O GND

I/O I/O I/O I/O I/O VCCIO I/O I/O GND I/O I/O I/O I/O I/O I/O VCCINT GND GLOBAL I/O GND GLOBAL I/O GND I/O I/O I/O I/O I/O VCCIO I/O I/O

I/O 74 MSCOFF/
I/O 73 FS1BRAKE
GND 72 DGND
TDO 71 TDO
I/O 70 37
I/O 69 36
I/O 68 35
I/O 67 34
I/O 66 +5V
VCCIO 65 33
I/O 64 32
I/O 63 31
TCK 62 TCK
I/O 61 30
I/O 60 29
GND 59 DGND
I/O 58 28
I/O 57 27
I/O 56 26
I/O 55 25
I/O 54 24

9 33 10 34 11 35 12 36 FS2OVRD/ 38 +5V 13 39 14 40 15 41 DGND 42 +5V 43 16 44 17 45 18 46 DGND 47 19 48 20 49 21 50 22 51 23 52 +5V 53

PROGRAMMING HEADER

+5V — R3 1K — R2 1K — TCK — TDO — TMS — TDI — R1 1K — +5V

JP1: 1 2 / 3 4 / 5 6 / 7 8 / 9 10 — +5V — HEADER 5X2

J2 — PHOENIX 2PIN — +5V_IN — DGND

+5V IN — L1 FERRITE — F1 .7 — TVSS1 10V — C10 22uF — DGND

TP1 +5V — TP2 DGND — DGND

R12 220 — LED1 +5V — +5V — C11 .1 uF — DGND

Carnegie Institution of Washington
The Observatories
813 Santa Barbara Street
Pasadena, California 91101
PHONE (818) 577-1122 FAX (818) 795-8136

IMACS

Title: IMACS CHASSIS 1 ALTERA LOGIC BOARD

Size: C	Scale:	Drawn By: A. BAGISH	Revision:
Date: 8-Sep-2003 14:07:43		Checked By:	Sheet 16 of 90

File: C:\OCIW\Imacs 16 Aug 03\Motion Control System\IMACS Motion Control July 16 2003.DDB - Documents\Chassis 1 Altera Logic.Sch

BACK

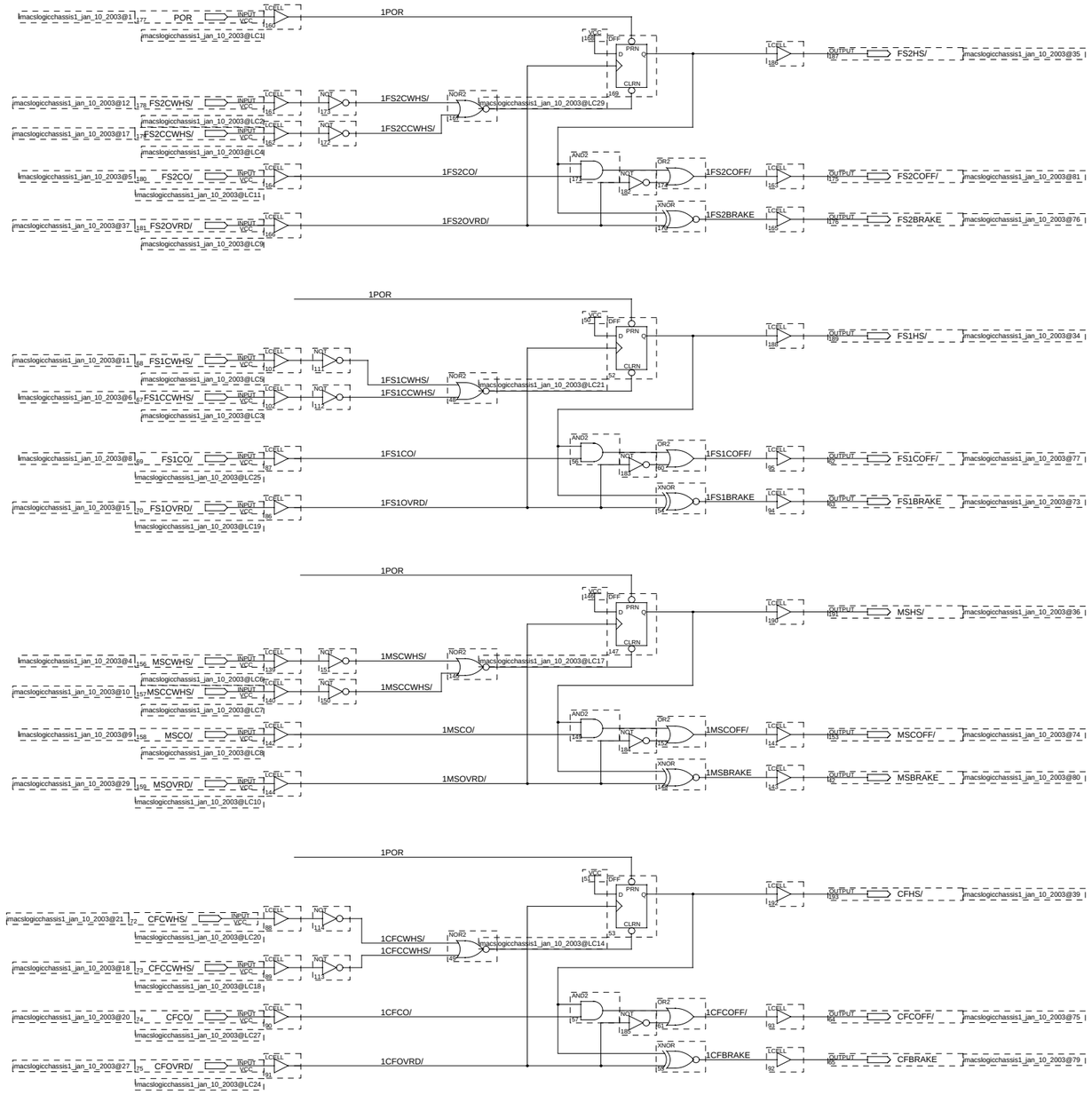

SETS HARD STOPS TO N.C. (GND)
CHECKSUM 001DBFB8

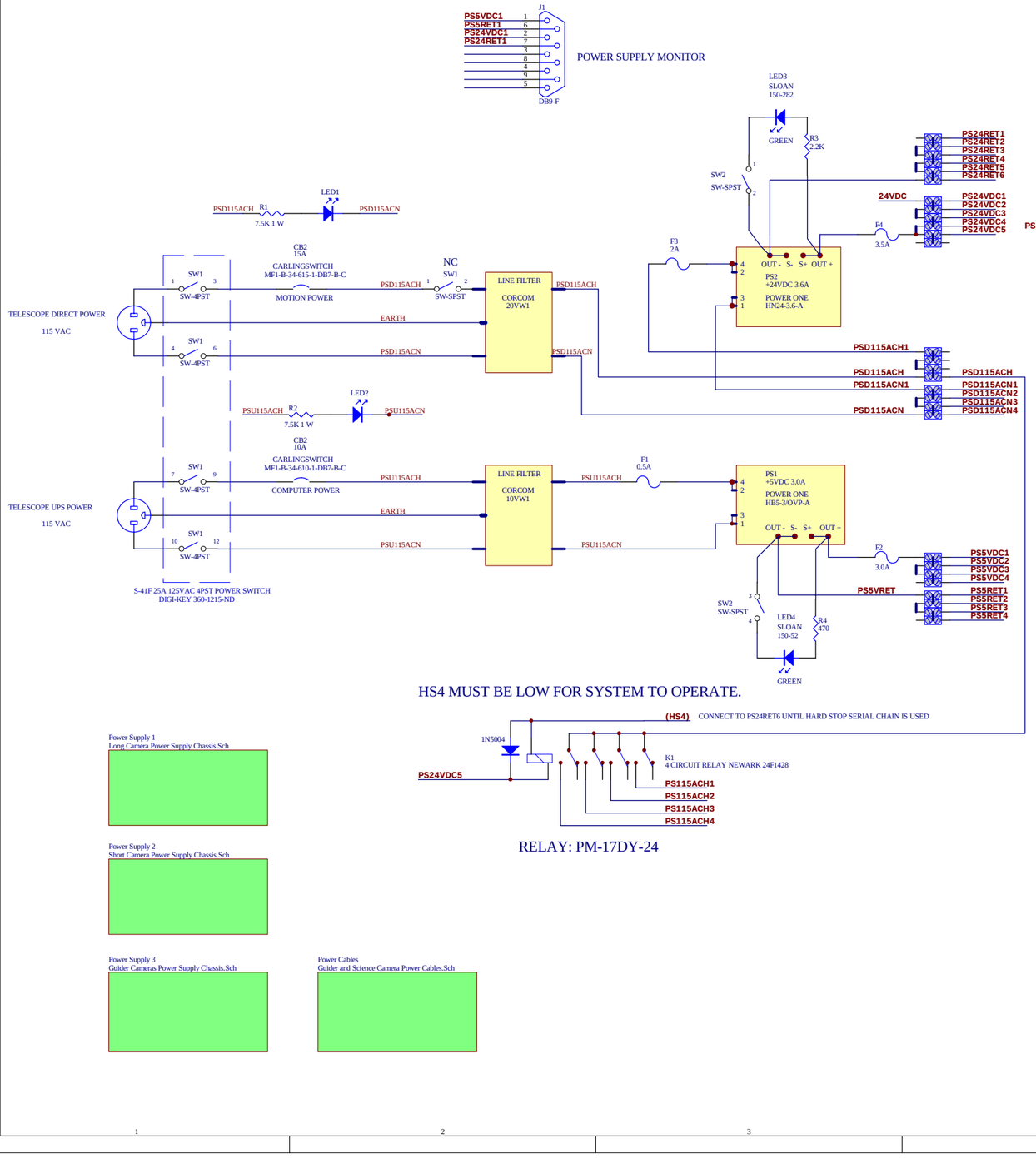

Carnegie Institution of Washington
The Observatories
813 Santa Barbara Street
Pasadena, California 91101
PHONE (818) 577-1122 FAX (818) 795-8136

IMACS

Title: POWER SUPPLY CHASSIS

Size: C	Scale:	Drawn By: A. BAGISH	Revision:
Date: 8-Sep-2003 14:07:59		Checked By:	Sheet 17 of 90

File: C:\OCIW\Imacs 16 Aug 03\Motion Control System\IMACS Motion Control July 16 2003.DDB - Documents\IMACS Power Supply Chassis.Sch

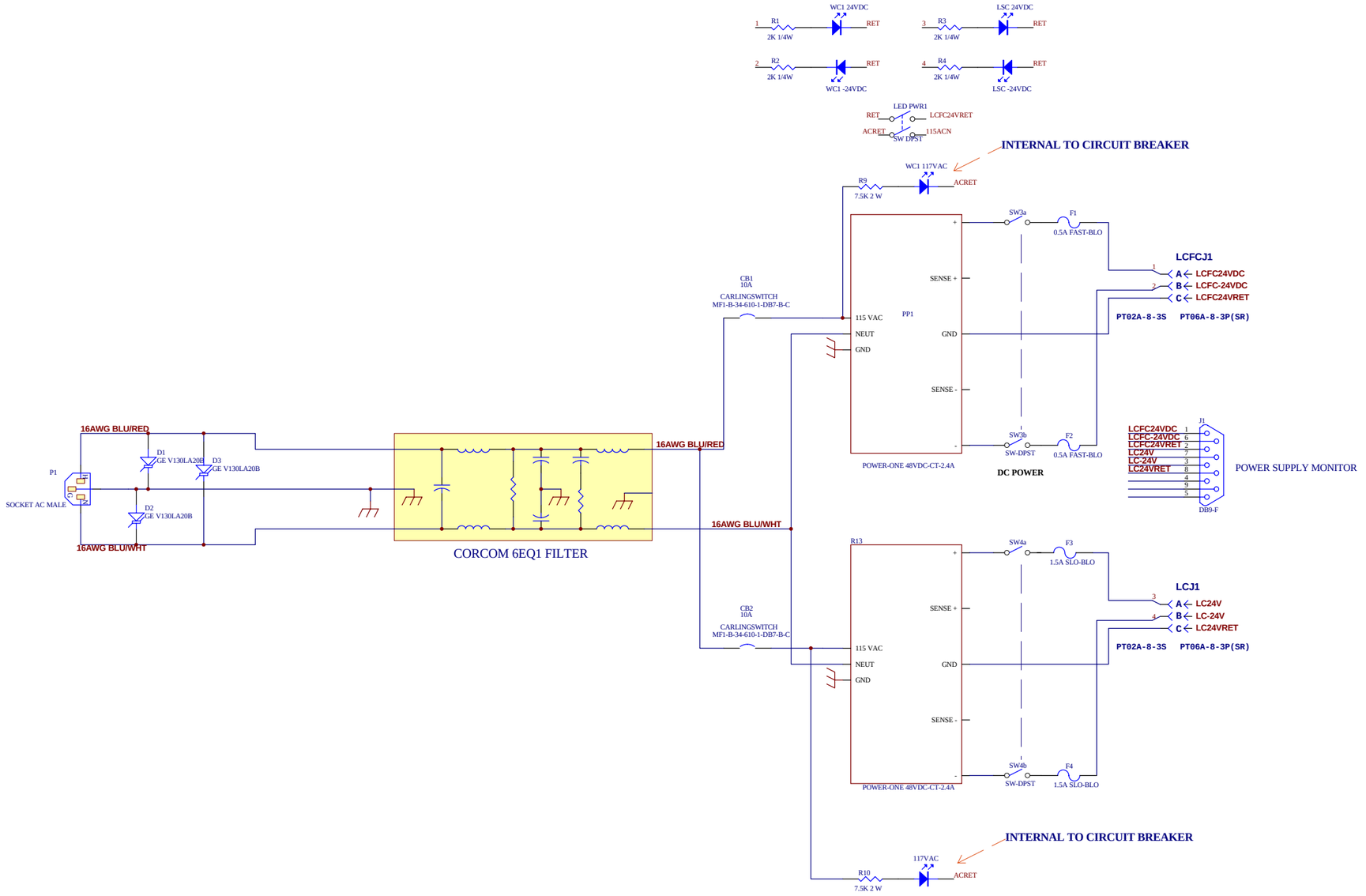

Carnegie Institution of Washington
The Observatories
813 Santa Barbara Street
Pasadena, California 91101
PHONE (818) 577-1122 FAX (818) 795-8136

IMACS

Title: LONG CAMERA POWER SUPPLY CHASSIS

Size:	Scale:	Drawn By:	Revision:
C		A. BAGISH	
Date: 8-Sep-2003 14:07:59		Checked By:	Sheet 18 of 90

File: C:\OCIW\Imacs 16 Aug 03\Motion Control Systems\IMACS Motion Control July 16 2003.DDB - Documents\Long Camera Power Supply Chass

SCFC 24VDC
R5 2K 1/4W
RET
LSC 24VDC
R7 2K 1/4W
RET
R6 2K 1/4W
RET
SCFC -24VDC
R8 2K 1/4W
RET
LSC -24VDC

LED PWR2
RET
SCFC24VRET
ACRET
115ACN
SW DPST

INTERNAL TO CIRCUIT BREAKER

117VAC
R10 7.5K 2 W
ACRET

CB1 10A
CARLINGSWITCH MF1-B-34-610-1-DB7-B-C

PP1
FLEXURE CCDS
115 VAC
NEUT
GND
SENSE +
SENSE -
GND

SW3a
F1 0.5A FAST-BLO
SW3b
F2 0.5A FAST-BLO
POWER-ONE 48VDC-CT-2.4A

DC POWER

WC2J1
A ← SCFC24V
B ← SCFC-24V
C ← SCFC24VRET
SHORT CAMERA FLEXURE CCDS
PT02A-8-3S PT06A-8-3P(SR)

J1
SCFC24V 1
SCFC-24V 6
SCFC24VRET 2
SC24V 7
SC-24V 3
SC24VRET 8
4
9
5
DB9-F
POWER SUPPLY MONITOR

16AWG BLU/RED
P1
SOCKET AC MALE
D1 GE V130LA20B
D3 GE V130LA20B
D2 GE V130LA20B
16AWG BLU/WHT
16AWG BLU/RED
16AWG BLU/WHT
CORCOM 6EQ1 FILTER

CB2 10A
CARLINGSWITCH MF1-B-34-610-1-DB7-B-C

PP2
SCIENCE ARRAY
115 VAC
NEUT
GND
SENSE +
SENSE -
GND

SW4a
F3 1.5A SLO-BLO
SW4b
F4 1.5A SLO-BLO
POWER-ONE 48VDC-CT-2.4A

DC POWER

SCJ1
A ← SC24V
B ← SC-24V
C ← SC24VRET
SHORT CAMERA SCIENCE ARRAY
PT02A-8-3S PT06A-8-3P(SR)

INTERNAL TO CIRCUIT BREAKER

117VAC
R10 7.5K 2 W
ACRET

Carnegie Institution of Washington
The Observatories
813 Santa Barbara Street
Pasadena, California 91101
PHONE (818) 577-1122 FAX (818) 795-8136

IMACS

Title: SHORT CAMERA POWER SUPPLY CHASSIS

Size: C	Scale:	Drawn By: A. BAGISH	Revision:
Date: 8-Sep-2003 14:07:59		Checked By:	Sheet 19 of 90

File: C:\OCIW\Imacs 16 Aug 03\Motion Control System\IMACS Motion Control July 16 2003.DDB - Documents\Short Camera Power Supply Chass

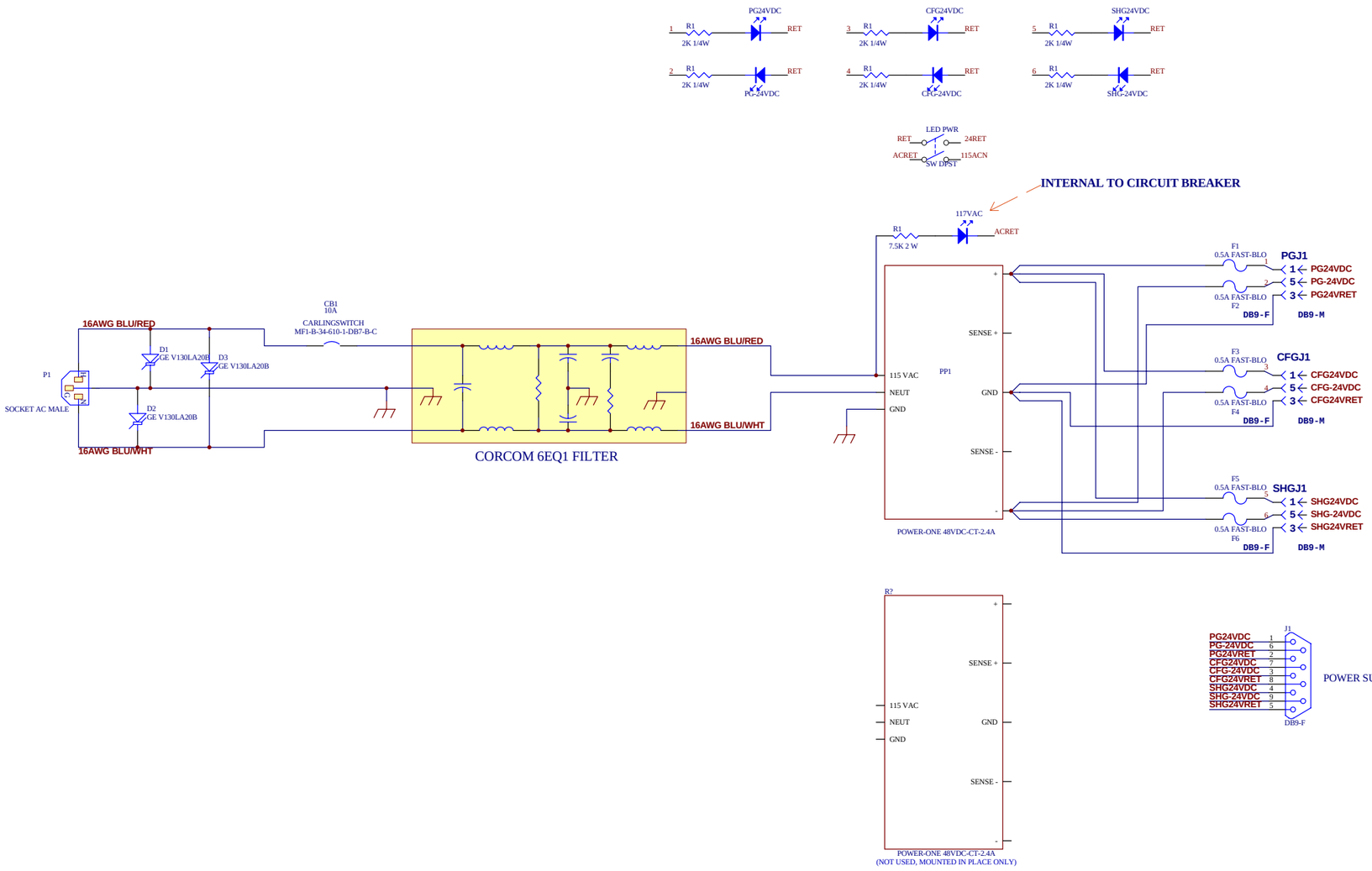

Carnegie Institution of Washington
The Observatories
813 Santa Barbara Street
Pasadena, California 91101
PHONE (818) 577-1122 FAX (818) 795-8136

IMACS

Title: Guider Cameras Power Supply Chassis

Size: C	Scale:	Drawn By: A. BAGISH	Revision:
Date: 8-Sep-2003 14:08:00		Checked By:	Sheet 20 of 90

File: C:\OCIW\Imacs 16 Aug 03\Motion Control Systems\IMACS Motion Control July 16 2003.DDB - Documents\Guider Cameras Power Supply Cha

BACK

DATA CABLES: HD15M-HD15M

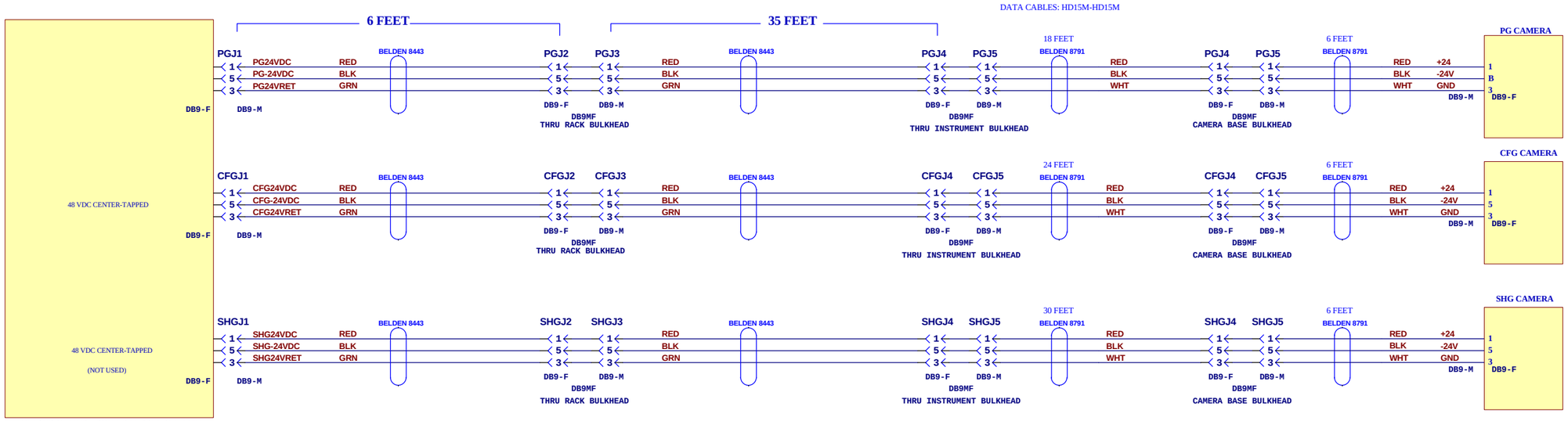

Guide Camera Data Cable

1	RED_GRN	TxD-
2	ORG_WHT	TXFS+
3	GRN_WHT	RXD+
4	BRN_WHT	RXCK-
5	GRY_WHT	RST+
6	GRN_RED	TXD+
7	BLU_WHT	TXCD-
8	RED_ORG	GND
9	WHT_BRN	RXCK+
10	BLU_RED	RXFS-
11	WHT_BLU	TXCD+
12	WHT_ORG	TXFS-
13	WHT_GRN	RXD-
14	RED_BLU	RXFS+
15	WHT_GRY	RST-

ORG_RED NOT USED

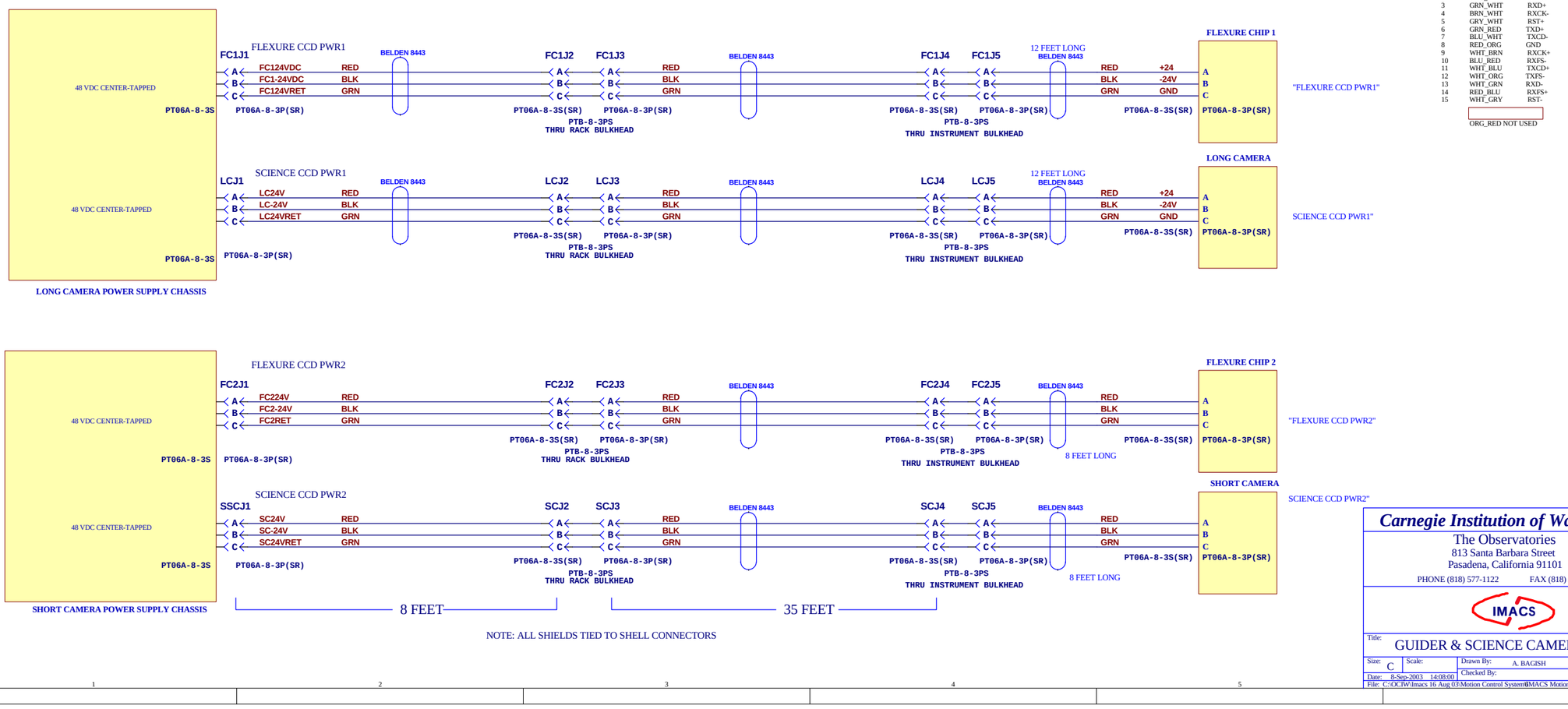

NOTE: ALL SHIELDS TIED TO SHELL CONNECTORS

Carnegie Institution of Washington
The Observatories
813 Santa Barbara Street
Pasadena, California 91101
PHONE (818) 577-1122 FAX (818) 795-8136

IMACS

Title: GUIDER & SCIENCE CAMERA POWER CABLES

Size: C	Scale:	Drawn By: A. BAGISH	Revision:
Date: 8-Sep-2003 14:08:00		Checked By:	Sheet 21 of 90

File: C:\OCIW\Imacs 16 Aug 03\Motion Control System\IMACS Motion Control July 16 2003.DDB - Documents\Guider and Science Camera Power

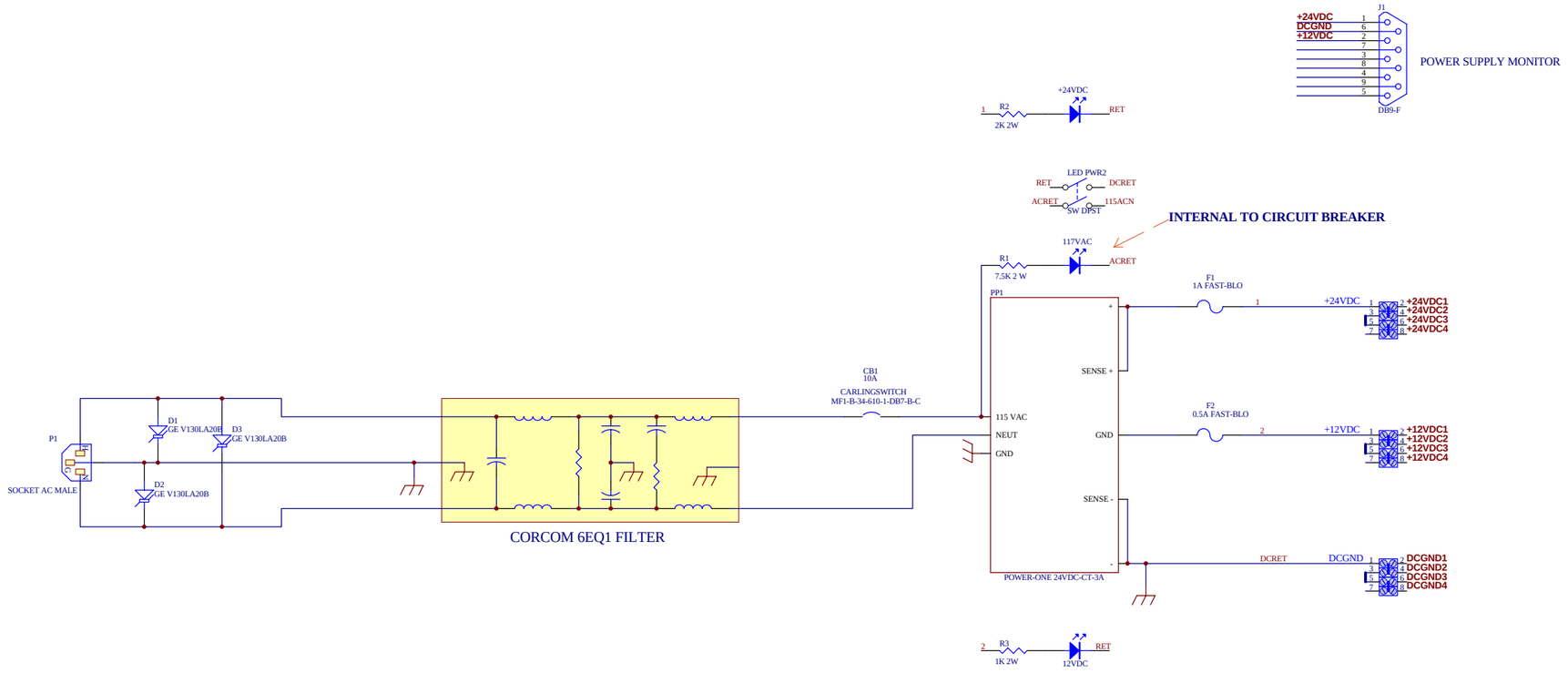

Carnegie Institution of Washington
The Observatories
813 Santa Barbara Street
Pasadena, California 91101
PHONE (818) 577-1122 FAX (818) 795-8136

IMACS

Title: CAMERA LO5 FOCUS CONTROLLER POWER SUPPLY CHASS

Size: C	Scale:	Drawn By: A. BAGISH	Revision:
Date: 8-Sep-2003 14:08:10		Checked By:	Sheet 22 of 90

File: C:\OCIW\Imacs 16 Aug 03\Motion Control System\IMACS Motion Control July 16 2003.DDB - Documents\Camera Focus Controller Power Su

DIO MODULES RACK 2A
IMACS DIO MR2A.Sch

SHACK-HARTMANN DIO MR2A
PRINCIPAL GUIDE DIO MR2A
DIO MR2A
CHASSIS 2 BRAKES
MR2A POWER

TERMINATES AT: COMPUTER CHASSIS
CJO3 P1

5VDC1
5RET1
24VDC1
24RET1

DIO MODULES RACK 2B
IMACS DIO MR2B.Sch

DIO MR2B
MR2B POWER

TERMINATES AT: COMPUTER CHASSIS
CJO3 P2

5VDC2
5RET2
24VDC2
24RET2

TERMINATES AT: COMPUTER CHASSIS
STEPPER INDEXER 2

A CW PULSE +	1		SHTCWP +
A CW PULSE -	14		SHTCWP-
A CCW PULSE +	2		SHTCCWP +
A CCW PULSE -	15		SHTCCWP -
A EXCITATION OFF	3		SHTCO/
A SERVO ON/OFF	16		
A DEVIATION COUNTER RESET	4	N.C.	SHTEAL+
A IN POSITION	17		
A ALARM	5		SHTEAL-
A NEAR HOME	18		SHTNS/
A FORWARD LIMIT	6		SHTCWLS/
A REVERSE LIMIT	19		SHTCCWLS/
A GENERAL PURPOSE INPUT	7		
A A-PHASE SIGNAL +	20		SHTEA+
A A-PHASE SIGNAL -	8		SHTEA-
A B-PHASE SIGNAL +	21		SHTEB+
A B-PHASE SIGNAL -	9		SHTEB-
A Z-PHASE SIGNAL +	22		SHTEI+
A Z-PHASE SIGNAL -	10		SHTEI-
B CW PULSE +	23		SHRCWP +
B CW PULSE -	11		SHRCWP-
B CCW PULSE +	24		SHRCCWP +
B CCW PULSE -	12		SHRCCWP -
B EXCITATION OFF	25		SHRCO/
B SERVO ON/OFF	13		
B DEVIATION COUNTER RESET	26	N.C.	SHREAL+
B IN POSITION	27		
B ALARM	39		SHREAL-
B NEAR HOME	28		SHRNS/
B FORWARD LIMIT	40		SHRCWLS/
B REVERSE LIMIT	29		SHRCCWLS/
B GENERAL PURPOSE INPUT	41		
B A-PHASE SIGNAL +	30		SHREA+
B A-PHASE SIGNAL -	42		SHREA-
B B-PHASE SIGNAL +	31		SHREB+
B B-PHASE SIGNAL -	43		SHREB-
B Z-PHASE SIGNAL +	32		SHREI+
B Z-PHASE SIGNAL -	44		SHREI-
C CW PULSE +	33		PGCWP +
C CW PULSE -	45		PGCWP-
C CCW PULSE +	34		PGCCWP +
C CCW PULSE -	46		PGCCWP -
C EXCITATION OFF	35		PGCO/
C SERVO ON/OFF	47		
C DEVIATION COUNTER RESET	36	N.C.	PGEAL+
C IN POSITION	48		
C ALARM	37		PGEAL-
C NEAR HOME	49		PGNS/
C FORWARD LIMIT	38		PGCWLS/
C REVERSE LIMIT	50		PGCCWLS/
C GENERAL PURPOSE INPUT	14		
C A-PHASE SIGNAL +	51		PGEA+
C A-PHASE SIGNAL -	15		PGEA-
C B-PHASE SIGNAL +	52		PGEB+
C B-PHASE SIGNAL -	16		PGEB-
C Z-PHASE SIGNAL +	53		PGEI+
C Z-PHASE SIGNAL -	17		PGEI-
D CW PULSE +	54		
D CW PULSE -	18		
D CCW PULSE +	55		
D CCW PULSE -	19		
D EXCITATION OFF	56		
D SERVO ON/OFF	20		
D DEVIATION COUNTER RESET	57		
D IN POSITION	21		
D ALARM	58		
D NEAR HOME	22		
D FORWARD LIMIT	59		
D REVERSE LIMIT	23		
D GENERAL PURPOSE INPUT	60		
D A-PHASE SIGNAL +	24		
D A-PHASE SIGNAL -	61		
D B-PHASE SIGNAL +	25		
D B-PHASE SIGNAL -	62		
D Z-PHASE SIGNAL +	26		
D Z-PHASE SIGNAL -	63		
EMERGENCY STOP SIGNAL	27		
GND FOR ES	64		GND4
GND FOR ES	28		GND5
GND FOR ES	65		GND6

ALTERA LOGIC CHASSIS 2
CHASSIS 2 ALTERA LOGIC.Sch

DRIVERS 1-4 CURRENT SHUTOFF FROM INDEXER 2
DRIVERS 1-4 HARD STOPS FROM DIO CARDS
CHASSIS 2 BRAKES
ALTERA LOGIC CHASSIS 2 DC POWER

SHACK-HARTMANN DRIVERS
IMACS SHGC Drivers.Sch

SHACK-HARTMANN DIO MR2A
SHACK-HARTMANN INDEXER
SHACK-HARTMANN DC POWER
SHACK-HARTMANN AC POWER
SHACK-HARTMANN HARD STOP RET
SHACK-HARTMANN HARD STOP

PRINCIPAL GUIDER DRIVER
IMACS PGC Driver.Sch

PRINCIPAL GUIDE DIO MR2A
PRINCIPAL GUIDE INDEXER
PRINCIPAL GUIDE DC POWER
PRINCIPAL GUIDE AC POWER
PRINCIPAL GUIDE HARD STOP
PRINCIPAL GUIDE HARD STOP RET

HS2 — SHHS
SHHSRET
PGHS
PGHSRET

HS1 — 24VRET

SHR115ACH
SHT115ACH
PG115ACH
PS115ACH2 — A
TB 115VAC

SHR115ACN
SHT115ACN
PG115ACN
SCP115ACN
PS115ACN2 — J
TB 115VAC NEUTRAL

PS
115 VAC
NEUT
GND
SENSE +
SENSE -
GND7
SHRE5V
SHTE5V
PGE5V
24 VDC POWER SUPPLY

24VDC1
SHRBRAKE (+)
SHM24VDC
SHTBRAKE (+)
PS24VDC2 — L
SHS24VDC
PGBRAKE (+)
PG24VDC
TB 24VDC
24VDC2

24RET1
SHM24RET
SHS24RET
PG24RET
PS24RET2 — E
TB 24RET
24RET2

5VDC1
SHRCO+
SHTCO+
PS5VDC2 — C
TB 5VDC
5VDC2

GROUND STAR

AL5VDC

SRET1
SHRE5V
SHTE5V
PGE0V
AL5RET
PS5RET2 — D
TB 5RET
SRET2

GND1
GND2
GND3
GND4
GND5
GND6
GND7

HS1 — F
HS2 — H
N.C. — B — N.C.
N.C. — K — N.C.
EARTH2 — G

PSJ6
BENDIX PT SERIES 1
PT06A-18-11SW(SR) PT02A-18-11PW

TERMINATES AT: POWER SUPPLY CHASSIS
CHASSIS 2 POWER

NOTE 3 SHACK HARTMANN RADIAL ENCODER POWER IS SWITCHED THROUGH OPTO22.
NOTE 2 SHACK HARTMANN THETA AND PRINCIPAL GUIDER ENCODER POWER IS ALWAYS ON.
NOTE 1 ADJUST OUTPUT TO 5.6V TO COMPENSATE FOR VOLTAGE DROP UNDER LOAD ACROSS CABLE WRAP.

Carnegie Institution of Washington
The Observatories
813 Santa Barbara Street
Pasadena, California 91101
PHONE (818) 577-1122 FAX (818) 795-8136

IMACS

Title: CONTROL CHASSIS 2

Size: C	Scale:	Drawn By: A. Bagish	Revision:
Date: 8-Sep-2003 14:07:44		Checked By:	Sheet 23 of 90

File: C:\OCIW\Imacs 16 Aug 03\Motion Control System\IMACS Motion Control July 16 2003.DDB :: Documents\IMACS Chassis 2.Sch

TO: CONTROL CHASSIS 2

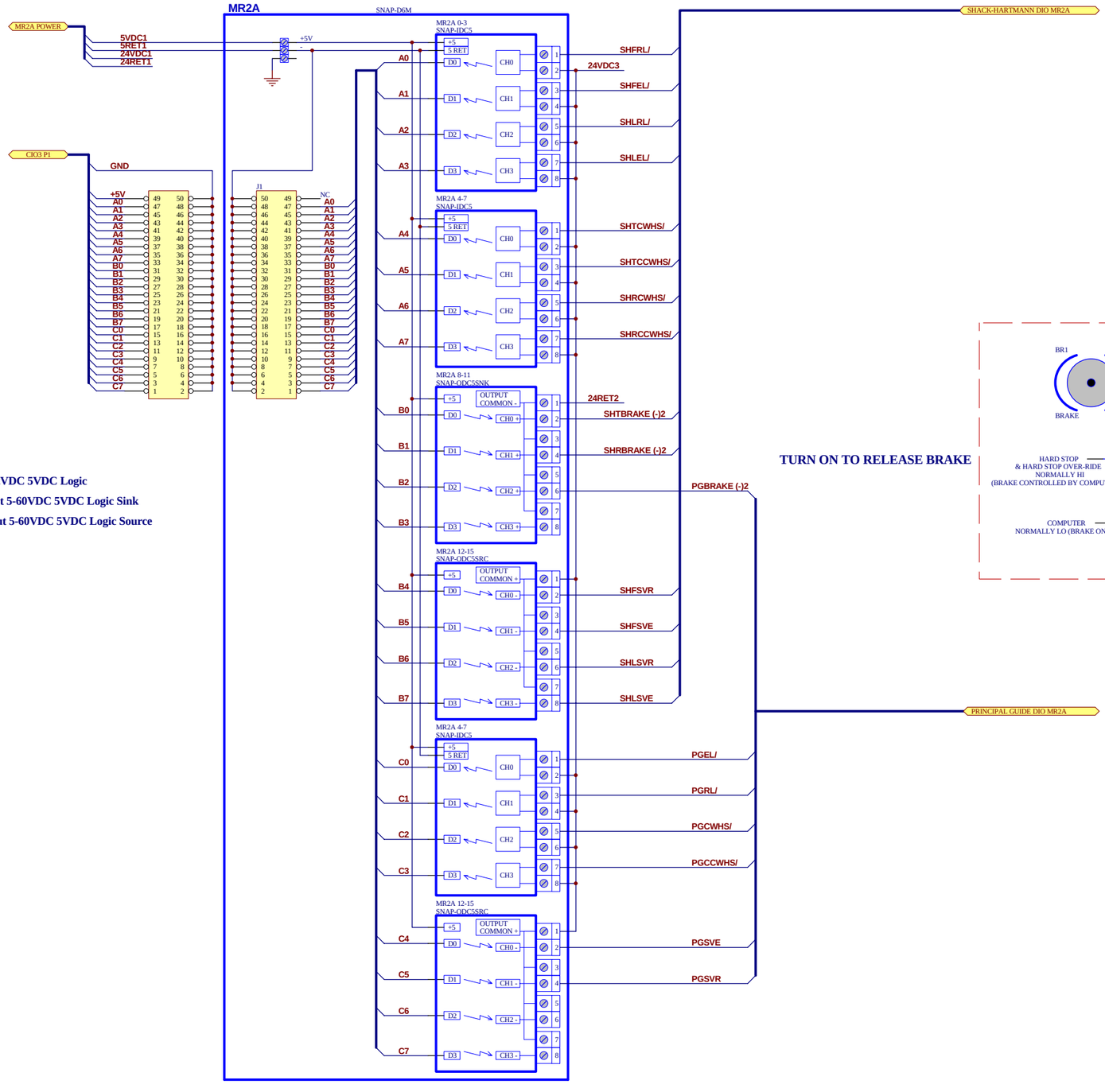

SNAP-IDC5: 4 Channel DC Input 10-32VDC 5VDC Logic

SNAP-ODC5SNK: 4 Channel DC Output 5-60VDC 5VDC Logic Sink

SNAP-ODC5SRC: 4 Channel DC Output 5-60VDC 5VDC Logic Source

TURN ON TO RELEASE BRAKE

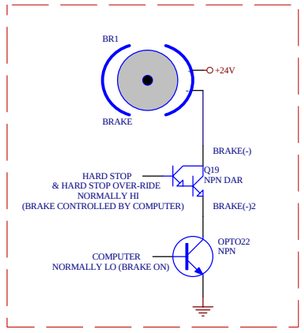

TO: CONTROL CHASSIS 2

Carnegie Institution of Washington
The Observatories
813 Santa Barbara Street
Pasadena, California 91101
PHONE (818) 577-1122 FAX (818) 795-8136

IMACS

Title: Opto22 Module Rack 2A

Size: C	Scale:	Drawn By: A. BAGISH	Revision:
Date: 8-Sep-2003 14:07:44		Checked By:	Sheet 24 of 90

File: C:\OCIW\Imacs 16 Aug 03\Motion Control Systems\IMACS Motion Control July 16 2003.DDB - Documents\IMACS DIO MR2A.Sch

TO: CONTROL CHASSIS 2

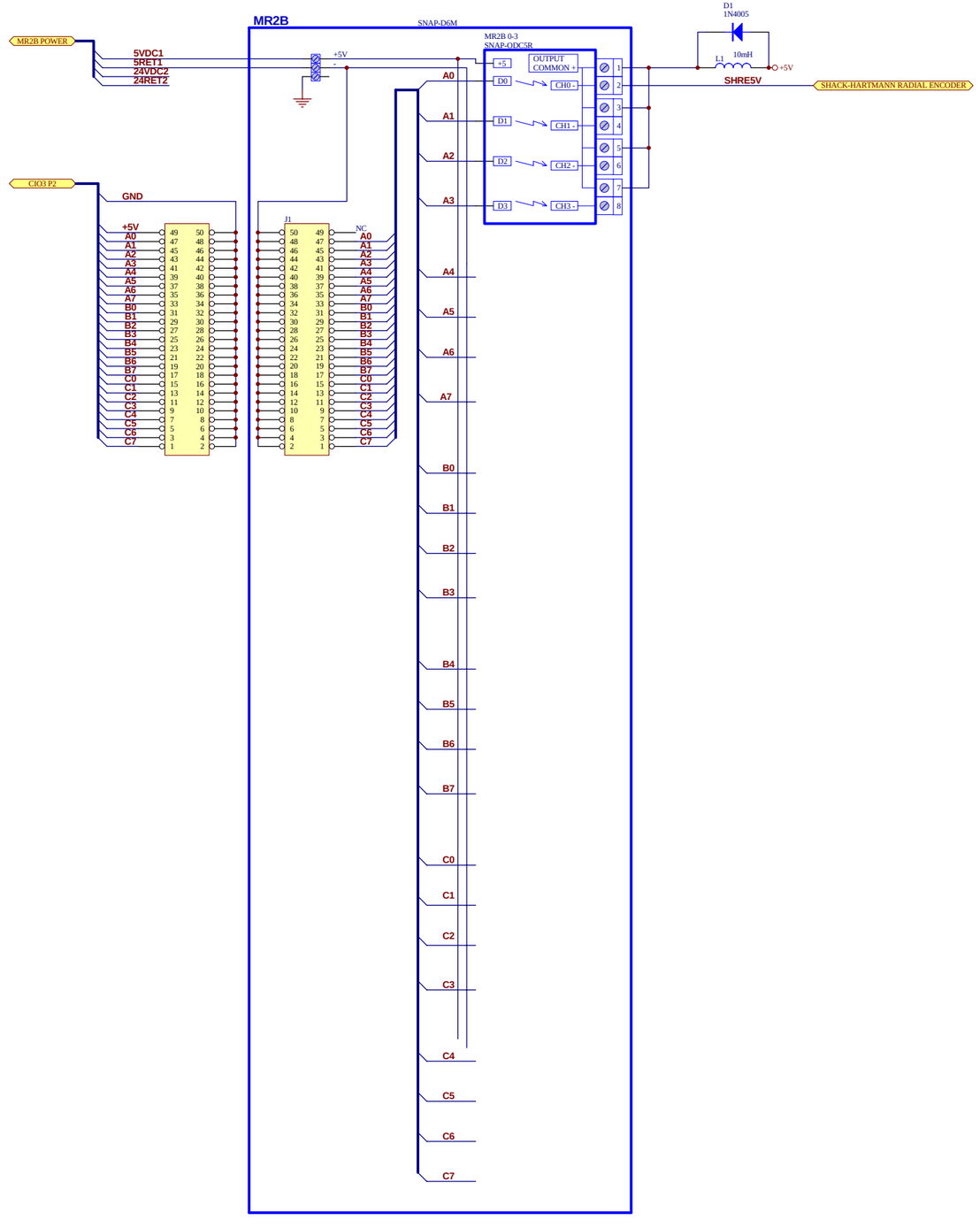

Carnegie Institution of Washington
The Observatories
813 Santa Barbara Street
Pasadena, California 91101
PHONE (818) 577-1122 FAX (818) 795-8136

IMACS

Title: Opto22 Module Rack 2B

Size: C	Scale:	Drawn By: A. BAGISH	Revision:
Date: 8-Sep-2003 14:07:45		Checked By:	Sheet 25 of 90

File: C:\OCIW\Imacs 16 Aug 03\Motion Control System\IMACS Motion Control July 16 2003.DDB - Documents\IMACS DIO MR2B.Sch

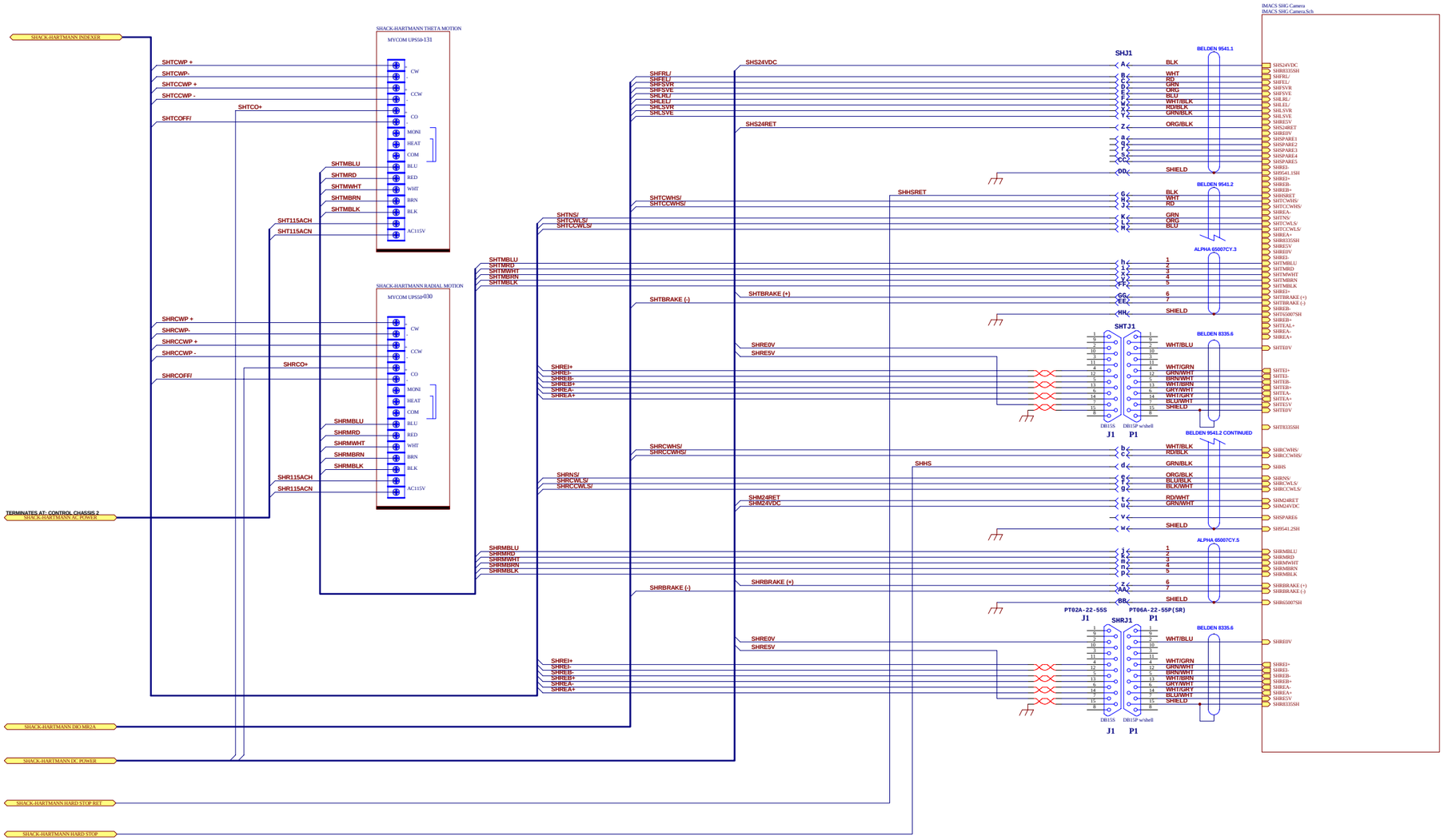

Carnegie Institution of Washington
The Observatories
813 Santa Barbara Street
Pasadena, California 91101
PHONE (818) 577-1122 FAX (818) 795-8136

IMACS

Title: SHACK-HARTMANN DRIVER

Size: C	Scale:	Drawn By: A. Bagish	Revision:
		Checked By:	Sheet 26 of 90

Date: 8-Sep-2003 14:07:45

File: C:\OCIW\Imacs 16 Aug 03\Motion Control System\IMACS Motion Control July 16 2003.DDB - Documents\IMACS SHGC Drivers.Sch

BACK

RETRACT IS RIGHT FROM CAMERA VIEW

27

FILTER SHUTTLE

LENS SHUTTLE

HARD STOPS

SOFT LIMITS

THETA

PS569-ACM

RADIAL

PS566-AM

SOFT LIMITS

BULKHEAD IN

BULKHEAD OUT

RACK BULKHEAD

INSTRUMENT BULKHEAD

RENISHAW ENCODER RGH 24D30A00A 5 MICRON

RENISHAW ENCODER RGH 24X30D00A 1 MICRON

SUNX GXL N12F N.O. NPN

SUNX GXL N12FB N.C. NPN

MYCOM INDEXER INPUT CIRCUIT
(NEAR, FORWARD, REVERSE)

THETA SOFT LIMITS

PS566-AM THETA MOTOR

RADIAL SOFT LIMITS

PS566-AM RADIAL MOTOR

Carnegie Institution of Washington
The Observatories
813 Santa Barbara Street
Pasadena, California 91101
PHONE (818) 577-1122 FAX (818) 795-8136
IMACS

Title: Shack-Hartman Guide Camera

Size: C | Scale: | Drawn By: A. Bagish | Revision:
Date: 8-Sep-2003 14:07:46 | Checked By: | Sheet 27 of 90

File: C:\COOW\Imacs 16 Aug 03\Motion Control System\IMACS Motion Control July 16 2003.DDB - Documents\IMACS SHG Camera.Sch

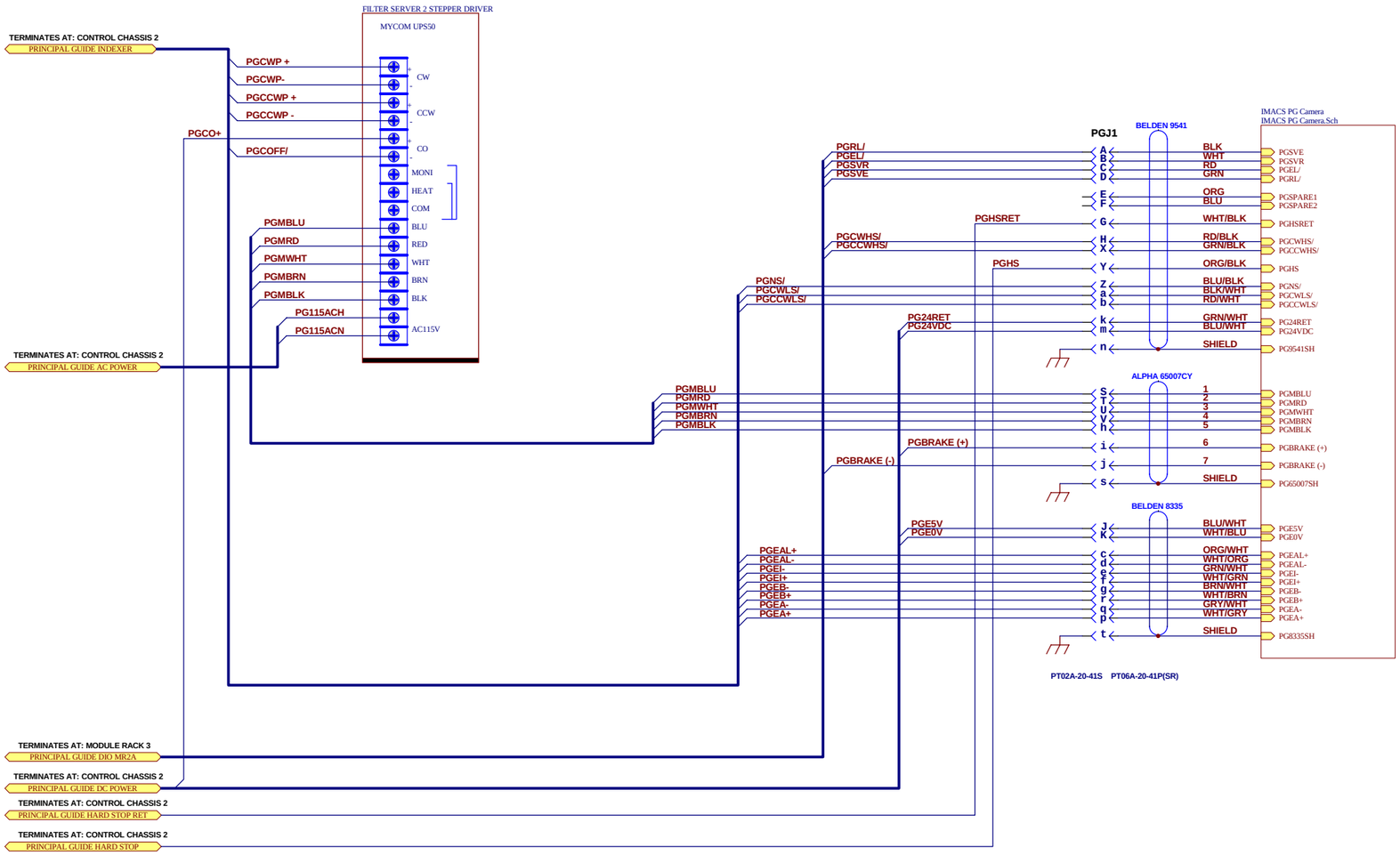

Carnegie Institution of Washington
The Observatories
813 Santa Barbara Street
Pasadena, California 91101
PHONE (818) 577-1122 FAX (818) 795-8136

IMACS

Title: PRINCIPAL GUIDE CAMERA DRIVER

Size: C	Scale:	Drawn By: A. BAGISH	Revision:
Date: 8-Sep-2003 14:07:47		Checked By:	Sheet 28 of 90

File: C:\OCIW\Imacs 16 Aug 03\Motion Control System\IMACS Motion Control July 16 2003.DDB - Documents\IMACS PGC Driver.Sch

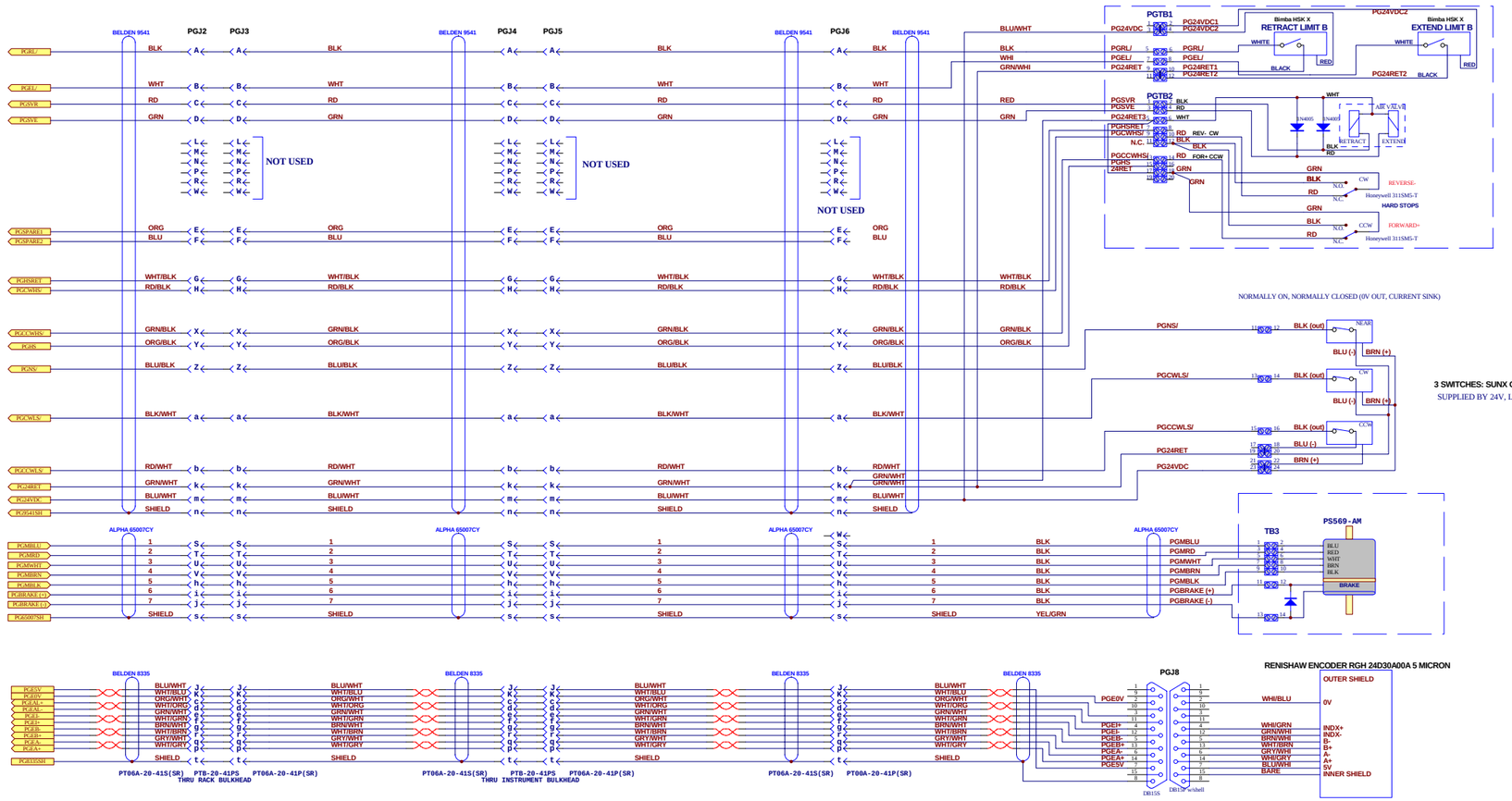

LAST MODIFIED: 7 JAN 2002

Carnegie Institution of Washington
The Observatories
813 Santa Barbara Street
Pasadena, California 91101
PHONE (818) 577-1122 FAX (818) 795-8136

IMACS

Title: PRINCIPAL GUIDE CAMERA

Size: C	Scale:	Drawn By: A. Bagish	Revision:
Date: 8-Sep-2003 14:07:47		Checked By:	Sheet 29 of 90

File: C:\OCIW\Imacs 16 Aug 03\Motion Control System\IMACS Motion Control July 16, 2003.DSN ...\Documents\IMACS PG Camera.Sch

BACK

PRINCIPAL GUIDER LOGIC BYPASSED

24V TO TTL

LOGIC INVERSION CURRENT SINK DIGIKEY 767-141-R3.3K-ND NET 14PIN SMD

DIGIKEY 767-143-R15K-ND ISOLATED 14PIN SMD

DIGIKEY 750-83-R1.8K-ND ISOLATED 8 PIN SIP PIN 1 RES 1

NORMALLY LO

SHTCWHS/ SHTCCWHS/ SHRCWHS/ SHRCCWHS/ PGCWHS/ PGCCWHS/

SHTCWHS24/ SHTCCWHS24/ SHRCWHS24/ SHRCCWHS24/ PGCWHS24/ PGCCWHS24/

Q1 Q2 Q3 Q4 Q5 Q6 2SD1277

R4A R4B R4C R4D R4E R4F 15K

R9A R9B R9C R9D R10A R10B 1.8K

R5A R5B R5C R5D R5E R5F 3.3K

+24V +5V

FROM ALTERA NORMALLY LO (BRAKE ON)

J1-32 J1-33 J1-34 J1-31

IN1_24V SPARE FROM J1-75

IN2_24V SPARE FROM J1-76

IN3_24V SPARE FROM J1-77

IN4_24V SPARE FROM J1-78

R10C R10D R11A R11B R11C R11D

R6A R6B R6C R6D R6E R6F

R5G R5H R5I R5J R5K R5L

Q7 Q8 Q9 Q10 Q11 Q12

LIMIT SWITCHES

NORMALLY HI

+24V R 1K OPTO22 INPUT SNAP-IDCS HS SW SPST NC

2SD1277

B C E

C E B TOP VIEW

TTL TO 24V

24V CURRENT SINK

DIGIKEY 767-143-R3.9K-ND ISOLATED 14PIN SMD

SHTBRAKE SHRBRAKE PGBRAKE U1-79

R7A R7B R7C R7D 470

Q13 Q14 Q15 Q16 2SD1277

SHTBRAKE(-) SHTBRAKE(-)2 SHRBRAKE(-) SHRBRAKE(-)2 PGBRAKE(-) PGBRAKE(-)2

J1-36

TO J1-39 SPARE FROM ALTERA

TO J1-40 SPARE FROM ALTERA

R7E R7F 470

Q17 Q18 2SD1277

OUT1_24V OUT1_24V2 OUT2_24V OUT2_24V2

SPARE TO J1-71 SPARE TO J1-72 SPARE TO J1-73 SPARE TO J1-74

BRAKES CONSUME 170 mA CUURENT WHEN RELEASED
FAILSAFE BRAKE: ON WHEN NOT ENERGIZED
NORMALLY HI (BRAKE ON)

OUTPUT IS IN SERIES WITH OPTO22 SINK MODULE

C12 1uF +5V R8E 3.3K POR

R8A 1 PGCO/
R8B 2 SHTCO/
R8C 3 SHRCO/
R8M 13 J1-29

DIGIKEY 767-141-R3.3K-ND NET 14PIN SMD

J1

1	DGND	
2	PGCO/	⟷ FROM INDEXER TO DRIVER
3	PGCOFF/	⟷ FROM INDEXER TO DRIVER
4	PGCWHS24/	
5	PGCWHS/	
6	PGCCWHS24/	
7	PGCCWHS/	
8	PGBRAKE(-)	FROM BRAKE TO OPTO 22
9	PGBRAKE(-)2	
10	PGOVRD/	SW1
11	SHTCO/	⟷ FROM INDEXER TO DRIVER
12	SHTCOFF/	⟷ FROM INDEXER TO DRIVER
13	SHTCWHS24/	
14	SHTCWHS/	
15	SHTCCWHS24/	
16	SHTCCWHS/	
17	SHTBRAKE(-)	FROM BRAKE TO OPTO 22
18	SHTBRAKE(-)2	
19	SHTOVRD/	SW2
20	SHRCO/	⟷ FROM INDEXER TO DRIVER (SHRCO/)
21	SHRCOFF/	⟷ FROM INDEXER TO DRIVER (SHRCOFF/)
22	SHRCWHS24/	
23	SHRCWHS/	
24	SHRCCWHS24/	
25	SHRCCWHS/	
26	SHRBRAKE(-)	FROM BRAKE TO OPTO 22 (SHRBRAKE(-))
27	SHRBRAKE(-)2	(SHRBRAKE(-)2)
28	SHROVRD/	SW3
29	J1-29	⟷ FROM INDEXER TO DRIVER
30	J1-30	
31	J1-31	
32	J1-32	
33	J1-33	
34	J1-34	
35	J1-35	
36	J1-36	FROM BRAKE TO OPTO 22
37	J1-37	
38	POR	SW4
39	2	
40	3	
41	4	
42	5	
43	6	
44	7	
45	8	
46	9 PGHS/	
47	10 SHTHS/	
48	11 SHRHS/	
49	12	
50	13 HS/	
51	14	
52	15	
53	16	
54	17	
55	18	
56	19	
57	20	
58	21	
59	22	
60	23	
61	24	
62	25	
63	26	
64	27	
65	28	
66	29	
67	30	
68	31	
69	32	
70	36	37 38
71	OUT1_24V	SPARE LEVEL SHIFTER 5V TO 24V
72	OUT1_24V2	
73	OUT2_24V	SPARE LEVEL SHIFTER 5V TO 24V
74	OUT2_24V2	
75	IN1_24V	SPARE LEVEL SHIFTER 24V TO 5V
76	IN2_24V	SPARE LEVEL SHIFTER 24V TO 5V
77	IN3_24V	SPARE LEVEL SHIFTER 24V TO 5V
78	IN4_24V	SPARE LEVEL SHIFTER 24V TO 5V
79		
80	+5V	

PHOENIX80

NOT USED (NO HARDSTOPS ON SHR)

TO HARDSTOP LED'S

SPARE ALTERA I/O

FRONT PANEL OVER-RIDE SWITCHES

SW2 PGOVRD/ R8L J1-25
SW1 SHTOVRD/ R8I J1-9
SW3 SHROVRD/ R8J J1-17
SW4 SCFOVRD/ R8K J1-33
SW SPST 3.3K +5V

BR1 +24V BRAKE BRAKE(-) HARD STOP & HARD STOP OVER-RIDE NORMALLY HI (BRAKE CONTROLLED BY COMPUTER) Q19 NPN DAR BRAKE(-)2 COMPUTER NORMALLY LO (BRAKE ON) Q20 NPN

C3 C4 0.1uF C9 22uF C5 0.1uF C6 C7 C8 0.1uF

U1

I/O VCCIO TDI GND TDO TCK GLOBAL I/O VCCINT

CHECKSUM = 001DBEFF

ALTERA EPM7128SLC84-7

C1 C2 0.1uF SHTCWHS24/ SHTCCWHS24/ J1-33 DGND J1-29 J1-31 TMS J1-37 SHROVRD/ DGND

R3 1K R2 1K R1 1K +5V JP1 TCK TDO TMS TDI HEADER 5X2 PROGRAMMING HEADER

J2 +5V_IN DGND PHOENIX 2PIN

+5V IN L1 FERRITE F1 .7 TVSS1 10V C10 22uF TP1 +5V TP2 DGND R12 220 LED1 +5V C11 .1 uF DGND

Carnegie Institution of Washington
The Observatories
813 Santa Barbara Street
Pasadena, California 91101
PHONE (818) 577-1122 FAX (818) 795-8136

IMACS

Title: IMACS CHASSIS 2 ALTERA LOGIC BOARD

Size: C	Scale:	Drawn By: A. BAGISH	Revision:
Date: 8-Sep-2003 14:07:48		Checked By:	Sheet 30 of 90

File: C:\OCIW\Imacs 16 Aug 03\Motion Control System\IMACS Motion Control July 16 2003.DDB - Documents\Chassis 2 Altera Logic.Sch

BACK

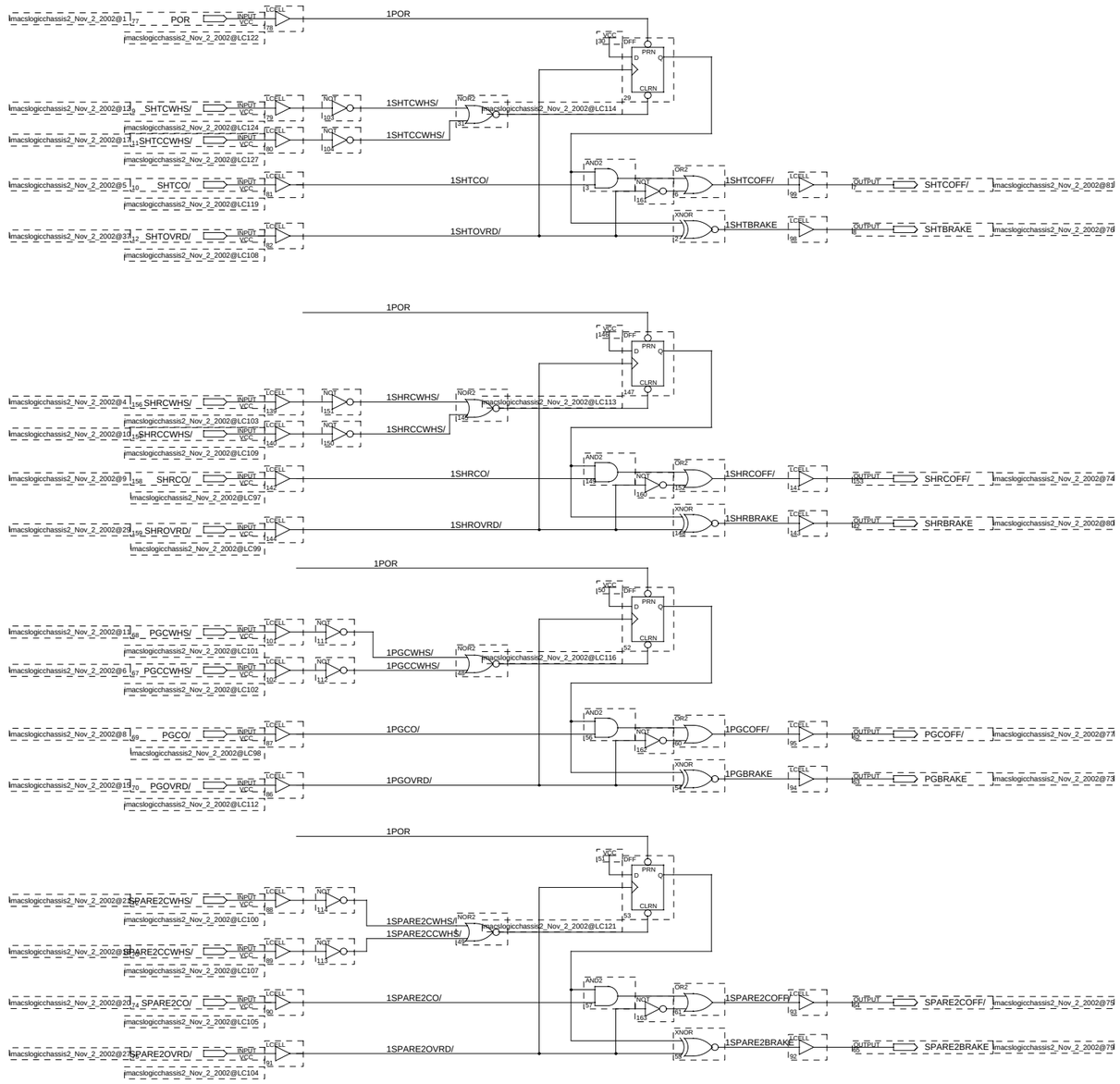

SETS HARD STOPS TO N.C. (GND)
CHECKSUM 001DC1C4

DIO MODULES RACK 3A
IMACS DIO MR3A.Sch

TERMINATES AT: COMPUTER CHASSIS
CEM P1

5VDC1
5RET1
24VDC1
24RET1
115ACH1

DIO MODULES RACK 3B
IMACS DIO MR3B.Sch

TERMINATES AT: COMPUTER CHASSIS
CEM P2

5VDC2
5RET2
24VDC2
24RET2

DIO MODULES RACK 3C
IMACS DIO MR3A.Sch

TERMINATES AT: COMPUTER CHASSIS
CEM P3

5VDC3
5RET3
24VDC3
24RET3
115ACH3

TERMINATES AT: COMPUTER CHASSIS
STEPPER INDEXER 3

A CW PULSE +	1	2	DTACWP +
A CW PULSE -	3	4	DTACWP-
A CCW PULSE +	5	6	DTACCWP +
A CCW PULSE -	7	8	DTACCWP -
A EXCITATION OFF	9	10	DTACO/
A SERVO ON/OFF	11	12	
A DEVIATION COUNTER RESET	13	14	
A IN POSITION	15	16	N.C. DTAEAL+
A ALARM	17	18	N.C. DTAEAL-
A NEAR HOME	19	20	DTANS/
A FORWARD LIMIT	21	22	DTACWLS/
A REVERSE LIMIT	23	24	DTACCWLS/
A GENERAL PURPOSE INPUT	25	26	
A A-PHASE SIGNAL +	27	28	DTAEA+
A A-PHASE SIGNAL -	29	30	DTAEA-
A B-PHASE SIGNAL +	31	32	DTAEB+
A B-PHASE SIGNAL -	33	34	DTAEB-
A Z-PHASE SIGNAL +	35	36	DTAEI+
A Z-PHASE SIGNAL -	37	38	DTAEI-
B CW PULSE +	39	40	DTBCWP +
B CW PULSE -	41	42	REVERSE DTBCWP-
B CCW PULSE +	43	44	DTBCCWP +
B CCW PULSE -	45	46	FORWARD DTBCCWP -
B EXCITATION OFF	47	48	DTBCO/
B SERVO ON/OFF	49	50	
B DEVIATION COUNTER RESET	51	52	
B IN POSITION	53	54	N.C. DTBEAL+
B ALARM	55	56	N.C. DTBEAL-
B NEAR HOME	57	58	DTBNS/
B FORWARD LIMIT	59	60	DTBCWLS/
B REVERSE LIMIT	61	62	DTBCCWLS/
B GENERAL PURPOSE INPUT	63	64	
B A-PHASE SIGNAL +	65	66	DTBEA+
B A-PHASE SIGNAL -	67	68	DTBEA-
B B-PHASE SIGNAL +	69	70	DTBEB+
B B-PHASE SIGNAL -	71	72	DTBEB-
B Z-PHASE SIGNAL +	73	74	NOTE REVERSAL DTBEI-
B Z-PHASE SIGNAL -	75	76	NOTE REVERSAL DTBEI+
C CW PULSE +	77	78	DTCCWP +
C CW PULSE -	79	80	DTCCWP-
C CCW PULSE +	81	82	DTCCCWP +
C CCW PULSE -	83	84	DTCCCWP -
C EXCITATION OFF	85	86	DTCCO/
C SERVO ON/OFF	87	88	
C DEVIATION COUNTER RESET	89	90	
C IN POSITION	91	92	N.C. DTCEAL+
C ALARM	93	94	N.C. DTCEAL-
C NEAR HOME	95	96	DTCNS/
C FORWARD LIMIT	97	98	DTCCWLS/
C REVERSE LIMIT	99	100	DTCCCWLS/
C GENERAL PURPOSE INPUT	101	102	
C A-PHASE SIGNAL +	103	104	DTCEA+
C A-PHASE SIGNAL -	105	106	DTCEA-
C B-PHASE SIGNAL +	107	108	DTCEB+
C B-PHASE SIGNAL -	109	110	DTCEB-
C Z-PHASE SIGNAL +	111	112	DTCEI+
C Z-PHASE SIGNAL -	113	114	DTCEI-
D CW PULSE +	115	116	DCCWP +
D CW PULSE -	117	118	DCCWP-
D CCW PULSE +	119	120	DCCCWP +
D CCW PULSE -	121	122	DCCCWP -
D EXCITATION OFF	123	124	DCCO/
D SERVO ON/OFF	125	126	
D DEVIATION COUNTER RESET	127	128	
D IN POSITION	129	130	N.C. DCEAL+
D ALARM	131	132	N.C. DCEAL-
D NEAR HOME	133	134	DCNS/
D FORWARD LIMIT	135	136	DCCWLS/
D REVERSE LIMIT	137	138	DCCCWLS/
D GENERAL PURPOSE INPUT	139	140	
D A-PHASE SIGNAL +	141	142	DCEA+
D A-PHASE SIGNAL -	143	144	DCEA-
D B-PHASE SIGNAL +	145	146	DCEB+
D B-PHASE SIGNAL -	147	148	DCEB-
D Z-PHASE SIGNAL +	149	150	DCEI+
D Z-PHASE SIGNAL -	151	152	DCEI-
EMERGENCY STOP SIGNAL	153	154	
GND FOR ES	155	156	GND4
GND FOR ES	157	158	GND5
GND FOR ES	159	160	GND6

TERMINATES AT: POWER SUPPLY CHASSIS
CHASSIS 1POWER

ALTERA LOGIC CHASSIS 3
CHASSIS 3 ALTERA LOGIC.Sch

DRIVERS 1-4 CURRENT SHUTOFF FROM INDEXER 3
DRIVERS 1-4 HARD STOPS FROM DIO3A,3B CARDS
CHASSIS 3 BRAKES: D*COFF/
ALTERA LOGIC CHASSIS 3 DC POWER

POWER TO BLACK ABS BOX CONTROLLING PZT CONTROLLER, INTERNAL FANS, VACUUM GAUGES & MICROPHONE.

S1
ABS AC SWITCH

DTA115ACH
DTB115ACH
DTC115ACH
DC115ACH
F115ACH
DTA115ACN
DTB115ACN
DTC115ACN
DC115ACN
H115ACRET
L115ACRET
F115ACRET

115ACH1
PS115ACH3
PS115ACN3
TB 115VAC
TB 115VAC NEUTRAL

DTA24VDC
DTABRAKE (+)
DTB24VDC
DTBBRAKE (+)
DTC24VDC
DTCBRAKE (+)
DCA24VDC
DCBRAKE (+)
PS24VDC3
TB 24VDC
24VDC1
24VDC2

DTA24RET
DTB24RET
DTC24RET
DCA24RET
DC24RET
PS24RET3
TB 24RET
24RET1
24RET2

DTACO+
DTBCO+
DTCCO+
DCCO+
ALT5VDC
PS5VDC3
TB 5VDC
5VDC1
5VDC2
GROUND STAR

DTAE0V
DTBE0V
DTCE0V
DCE0V
ALT5RET
PS5RET3
TB 5RET
5RET1
5RET2
GND4
GND5
GND6
GND1
GND2
GND3

HS2
HS3
N.C.
N.C.
EARTH3

PSJ7
BENDIX PT SERIES 1
PT06A-18-11SX(SR) PT02A-18-11PX

PT02A-12-10SW
LAMPS & POWER SUPPLIES
IMACS Lamps and Fans.Sch
LAMPS1-6
F115ACH
F115ACRET
L115ACRET

20-41 3 EA.
DISPERSER TILT DRIVERS
IMACS DT Drivers.Sch
DISPERSER TILT DIO MR3A
DISPERSER TILT INDEXERS
DISPERSER TILT DC POWER
DISPERSER TILT AC POWER
DISPERSER TILT HARD STOP BUSS
DT*CURRENT SHUTOFF

22-55
DISPERSER CAROUSEL DRIVER
IMACS DC Driver.Sch
DISPERSER CAROUSEL DIO MR3B
DISPERSER CAROUSEL INDEXER
DISPERSER CAROUSEL DC POWER
DISPERSER CAROUSEL AC POWER
DISPERSER CAROUSEL HARD STOP
DISPERSER CAROUSEL HARD STOP RET
DISPERSER CAROUSEL CURRENT SHUTOFF

12-10
IMACS Hatch
IMACS Hatch .Sch
ALPHA 65007CY
HRL/
HEL/
HSVR
HSVE
HMOTOR
H115ACRET
H24VDC
H24RET
HSHIELD
PT02A-12-10S (SR)

HS2
DCHS
DCHSRET
DTAHSRET
DTAHS
DTBHSRET
DTBHS
DTCHSRET
DTCHS
HS3

Carnegie Institution of Washington
The Observatories
813 Santa Barbara Street
Pasadena, California 91101
PHONE (818) 577-1122 FAX (818) 795-8136

IMACS

Title: CONTROL CHASSIS 3

Size:	Scale:	Drawn By:	Revision:
C		A. Ragish	
Date: 8-Sep-2003 14:07:49		Checked By:	Sheet 31 of 90

File: C:\OCIW\Imacs 16 Aug 03\Motion Control System@IMACS Motion Control July 16 2003.DDB - Documents\IMACS Chassis 3.Sch

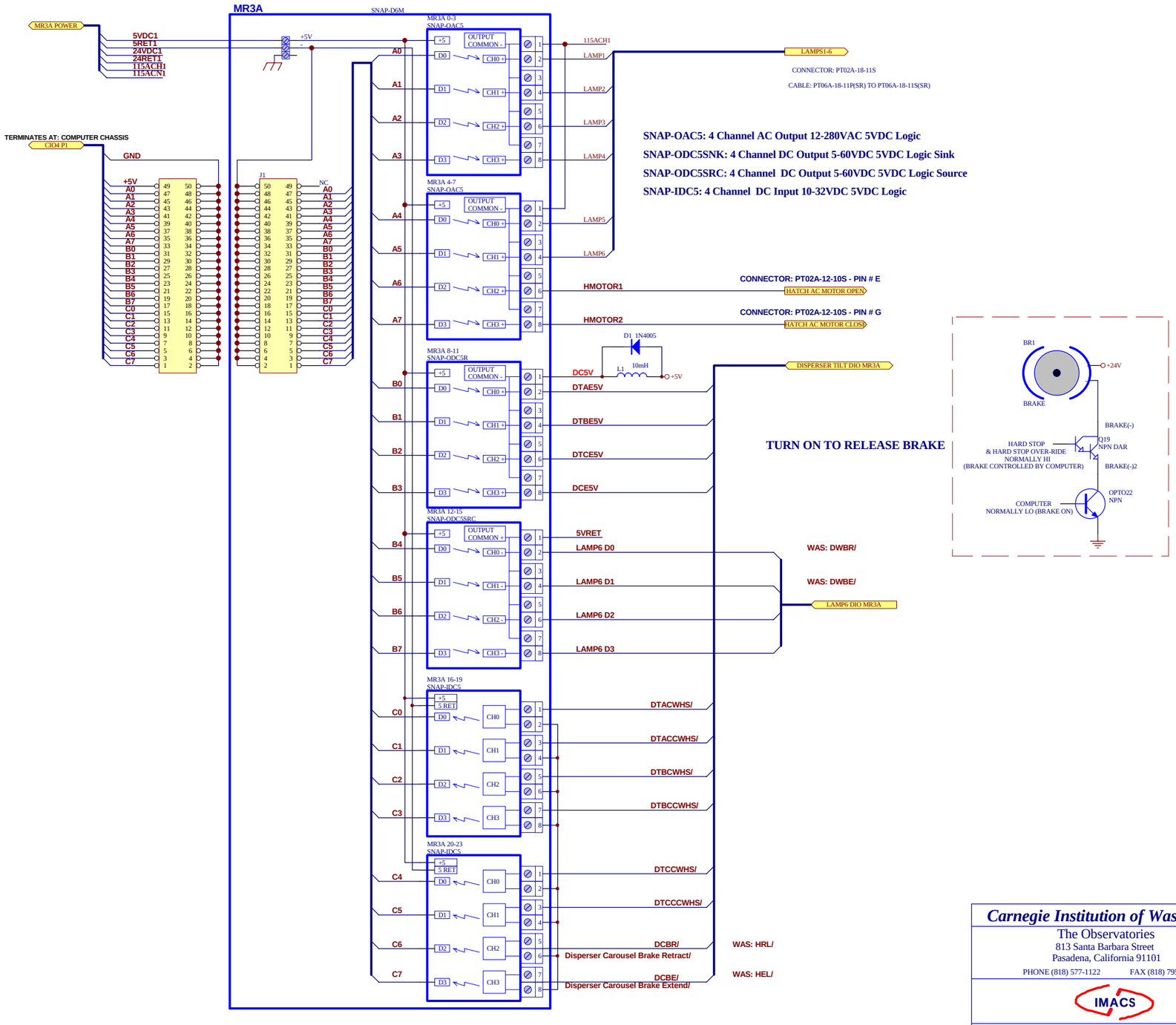

Carnegie Institution of Washington
The Observatories
813 Santa Barbara Street
Pasadena, California 91101
PHONE (818) 577-1122 FAX (818) 795-8136

IMACS

Title: Opto22 Module Rack 3A

Size: C	Scale:	Drawn By: A. BAGISH	Revision:
Date: 8-Sep-2003 14:07:49		Checked By:	Sheet 32 of 90

File: C:\OCIW\Imacs 16 Aug 03\Motion Control Systems\IMACS Motion Control July 16 2003.DDB - Documents\IMACS DIO MR3A.Sch

TO: CONTROL CHASSIS 3

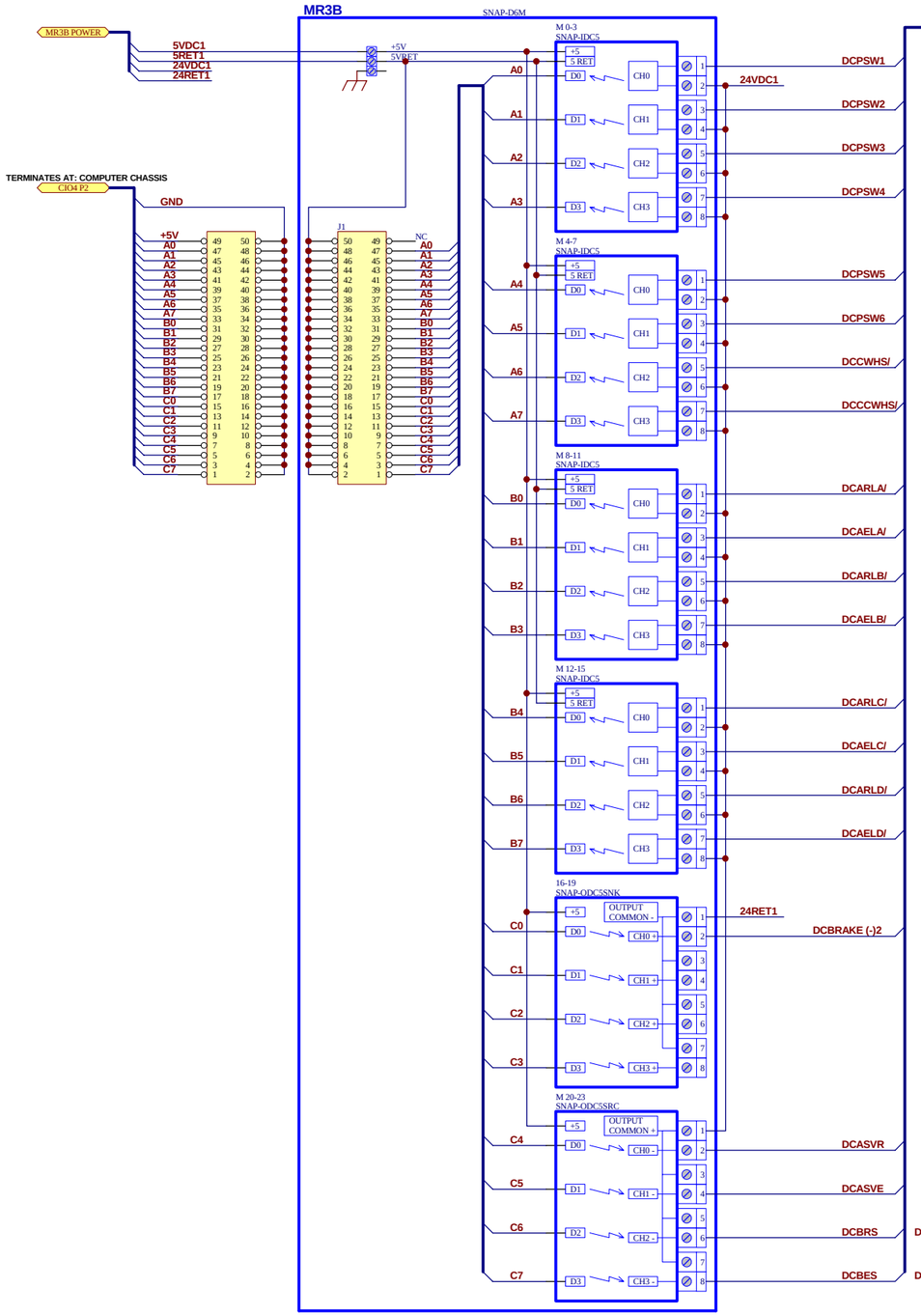

Disperser Carousel Brake Retract Solenoid

Disperser Carousel Brake Extend Solenoid

SNAP-IDC5: 4 Channel DC Input 10-32VDC 5VDC Logic

SNAP-ODC5SNK: 4 Channel DC Output 5-60VDC 5VDC Logic Sink

SNAP-ODC5SRC: 4 Channel DC Output 5-60VDC 5VDC Logic Source

TURN ON TO RELEASE BRAKE

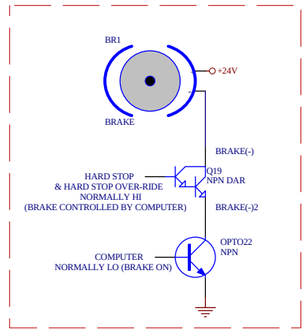

Carnegie Institution of Washington
The Observatories
813 Santa Barbara Street
Pasadena, California 91101
PHONE (818) 577-1122 FAX (818) 795-8136

IMACS

Title: Opto22 Module Rack 3B

Size: C	Scale:	Drawn By: A. BAGISH	Revision:
Date: 8-Sep-2003 14:07:49		Checked By:	Sheet 33 of 90

File: C:\OCIW\Imacs 16 Aug 03\Motion Control System\IMACS Motion Control July 16 2003.DDB - Documents\IMACS DIO MR3B.Sch

BACK

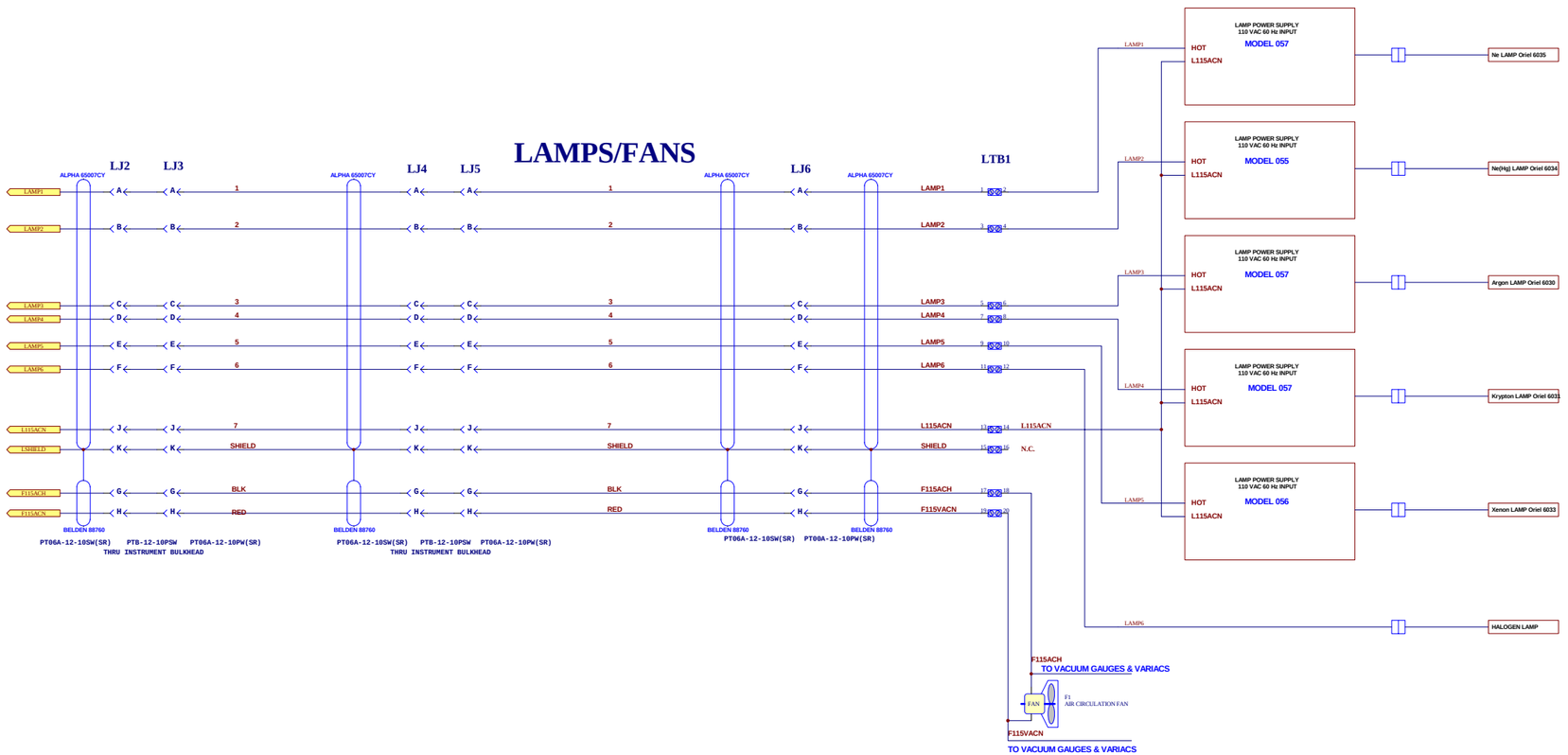

Next Page:
IMACS Lamp6 Phase Control Sch

Carnegie Institution of Washington
The Observatories
813 Santa Barbara Street
Pasadena, California 91101
PHONE (818) 577-1122 FAX (818) 795-8136

IMACS

Title: LAMPS & POWER SUPPLIES

Size: C	Scale:	Drawn By: A. Bagish	Revision:
Date: 8-Sep-2003 14:07:50		Checked By:	Sheet 34 of 90

File: C:\OCIW\Imacs 16 Aug 03\Motion Control System\IMACS Motion Control July 16 2003.DDB - Documents\IMACS Lamps and Fans.Sch

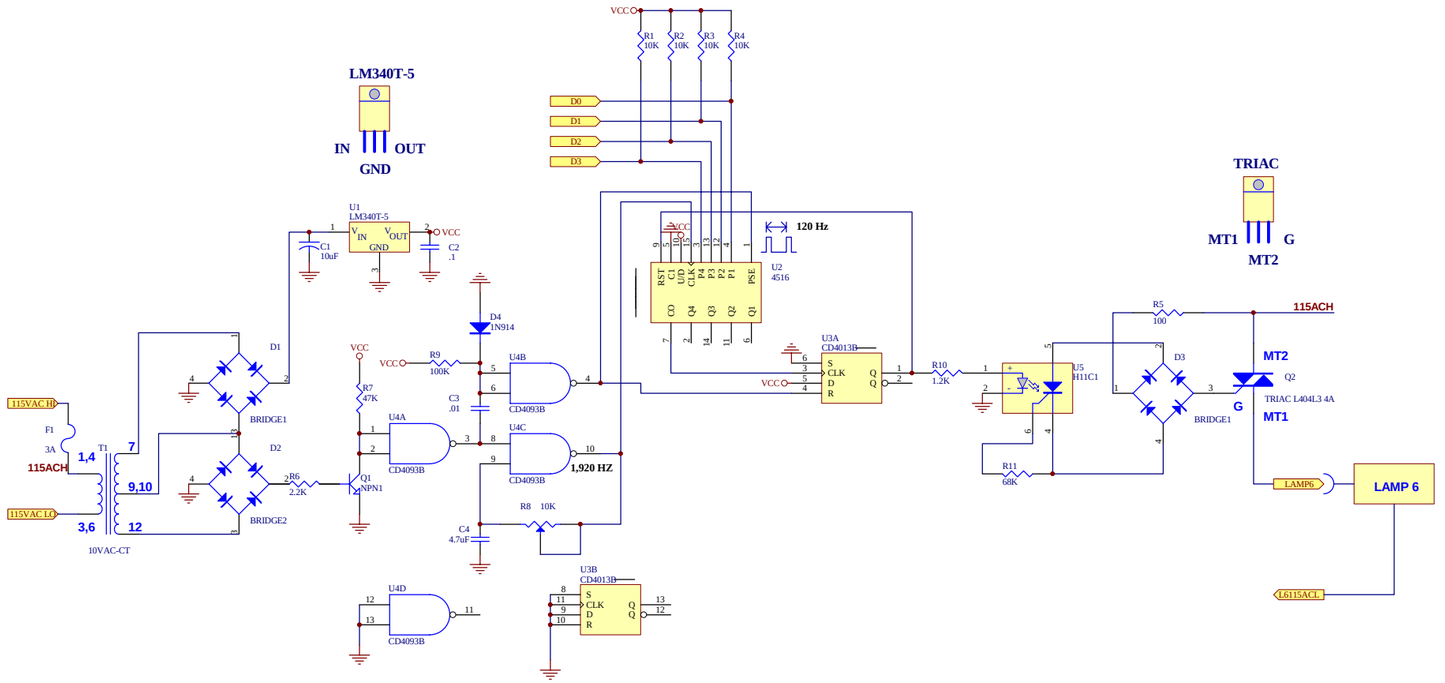

Carnegie Institution of Washington
The Observatories
813 Santa Barbara Street
Pasadena, California 91101
PHONE (818) 577-1122 FAX (818) 795-8136

IMACS

Title: IMACS LAMP6 DIGITAL PHASE CONTROL

Size: C	Scale:	Drawn By: A. BAGISH	Revision:
Date: 8-Sep-2003 14:07:50		Checked By:	Sheet 35 of 90

File: C:\OCIW\Imacs 16 Aug 03\Motion Control Systems\IMACS Motion Control July 16 2003.DDB - Documents\IMACS Lamp6 Phase Control.Sch

DISPERSER TILT INDEXERS

MYCOM INS50-111
DISPERSER TILT A DRIVER
MYCOM INS50
CW+ CO- CW- MONI CCW+ HEAT CCW- COM CO+
1/25
DTACWP +
DTACWP-/
DTACWP-
DTACCWP +
DTACCWP -
DTACO+
DTAMBLU
DTAMRD
DTAMWHT
DTAMBRN
DTAMBLK
BLU RED WHT BRN BLK AC115V
DTA115ACH
DTA115ACN

MYCOM INS50-111
DISPERSER TILT B DRIVER
MYCOM INS50
CW+ CO- CW- MONI CCW+ HEAT CCW- COM CO+
1/25
DTBCWP +
DTBCCWP-/
DTBCWP-
DTBCCWP +
DTBCCWP -
DTBCO+
DTBMBLU
DTBMRD
DTBMWHT
DTBMBRN
DTBMBLK
BLU RED WHT BRN BLK AC115V
DTB115ACH
DTB115ACN

MYCOM INS50-111
DISPERSER TILT C DRIVER
MYCOM INS50
CW+ CO- CW- MONI CCW+ HEAT CCW- COM CO+
1/25
DTCCWP +
DTCCCWP-/
DTCCWP-
DTCCCWP +
DTCCCWP -
DTCCO+
DTCMBLU
DTCMRD
DTCMWHT
DTCMBRN
DTCMBLK
BLU RED WHT BRN BLK AC115V
DTC115ACH
DTC115ACN

DISPERSER TILT AC POWER
DISPERSER TILT DIO MR3A
DISPERSER TILT DC POWER
DISPERSER TILT HARD STOP BUSS

DTATB1
DTAE5V DTAE5V DTAE5V DTAE0V DTAE0V DTAE0V

DTBTB1
DTBE5V DTBE5V DTBE5V DTBE0V DTBE0V DTBE0V

DTCTB1
DTCE5V DTCE5V DTCE5V DTCE0V DTCE0V DTCE0V

DTANS/ DTACWLS/ DTACCWLS/
DTAHSRET
DTACWHS/ DTACCWHS/
DTAHS
DTA24RET DTA24VDC
DTAMBLU DTAMRD DTAMWHT DTAMBRN DTAMBLK
DTABRAKE (-)
DTABRAKE (+)
DTAEAL+ DTAEAL- DTAEE- DTAEH+ DTAEEB- DTAEEB+ DTAEEA- DTAEEA+
DTAE5V DTAE0V
DTBNS/ DTBCWLS/ DTBCCWLS/
DTBHSRET
DTBCWHS/ DTBCCWHS/
DTBHS
DTB24RET DTB24VDC
DTBMBLU DTBMRD DTBMWHT DTBMBRN DTBMBLK
DTBBRAKE (-)
DTBBRAKE (+)
DTBEAL+ DTBEAL- DTBEE- DTBEH+ DTBEEB- DTBEEB+ DTBEEA- DTBEEA+
DTBE5V DTBE0V
DTCNS/ DTCCWLS/ DTCCCWLS/
DTCHSRET
DTCCWHS/ DTCCCWHS/
DTCHS
DTC24RET DTC24VDC
DTCMBLU DTCMRD DTCMWHT DTCMBRN DTCMBLK
DTCBRAKE (-)
DTCBRAKE (+)
DTCEAL+ DTCEAL- DTCEE- DTCEH+ DTCEEB- DTCEEB+ DTCEEA- DTCEEA+
DTCE5V DTCE0V

IMACS DT
IMACS DT.Sch

DTAJ1 — BELDEN 9541.1
BLK WHT HD GRN ORG BLU WHT/BLK RD/BLK GRN/BLK ORG/BLK BLU/BLK BLK/WHT RD/WHT GRN/WHT BLU/WHT SHIELD
DTAE5V DTAE5V DTAE5V DTAE0V DTAE0V DTAHSRET DTACWHS/ DTACCWHS/ DTAHS DTANS/ DTACWLS/ DTACCWLS/ DTA24RET DTA24VDC DTA9541SH

ALPHA 65007CY.1
DTAMBLU DTAMRD DTAMWHT DTAMBRN DTAMBLK DTABRAKE (+) DTABRAKE (-) DTA65007SH

DTAJ1 — BELDEN 8335.1
BLU/WHT WHT/BLU ORG/WHT WHT/ORG GRN/WHT WHT/GRN BRN/WHT WHT/BRN GRY/WHT WHT/GRY SHIELD
DTAE5V DTAE0V DTAEAL+ DTAEAL- DTAEE- DTAEH+ DTAEEB- DTAEEB+ DTAEEA- DTAEEA+ DTA8335SH
PT02A-20-41S PT06A-20-41P(SR)

DTBJ1 — BELDEN 9541.2
BLK WHT HD GRN ORG BLU WHT/BLK RD/BLK GRN/BLK ORG/BLK BLU/BLK BLK/WHT RD/WHT GRN/WHT BLU/WHT SHIELD
DTBE5V DTBE5V DTBE5V DTBE0V DTBE0V DTBHSRET DTBCWHS/ DTBCCWHS/ DTBHS DTBNS/ DTBCWLS/ DTBCCWLS/ DTB24RET DTB24VDC DTB9541SH

ALPHA 65007CY.2
DTBMBLU DTBMRD DTBMWHT DTBMBRN DTBMBLK DTBBRAKE (+) DTBBRAKE (-) DTB65007SH

DTBJ1 — BELDEN 8335.2
BLU/WHT WHT/BLU ORG/WHT WHT/ORG GRN/WHT WHT/GRN BRN/WHT WHT/BRN GRY/WHT WHT/GRY SHIELD
DTBE5V DTBE0V DTBEAL+ DTBEAL- DTBEE- DTBEH+ DTBEEB- DTBEEB+ DTBEEA- DTBEEA+ DTB8335SH
PT02A-20-41SW PT06A-20-41PW(SR)

DTCJ1 — BELDEN 9541.3
BLK WHT RD GRN ORG BLU WHT/BLK RD/BLK GRN/BLK ORG/BLK BLU/BLK BLK/WHT HU/WHT GRN/WHT BLU/WHT SHIELD
DTCE5V DTCE5V DTCE5V DTCE0V DTCE0V DTCHSRET DTCCWHS/ DTCCCWHS/ DTCHS DTCNS/ DTCCWLS/ DTCCCWLS/ DTC24RET DTC24VDC DTC9541SH

ALPHA 65007CY.3
DTCMBLU DTCMRD DTCMWHT DTCMBRN DTCMBLK DTCBRAKE (+) DTCBRAKE (-) DTC65007SH

DTCJ1 — BELDEN 8335.3
BLU/WHT WHT/BLU ORG/WHT WHT/ORG GRN/WHT WHT/GRN BRN/WHT WHT/BRN GRY/WHT WHT/GRY SHIELD
DTCE5V DTCE0V DTCEAL+ DTCEAL- DTCEE- DTCEH+ DTCEEB- DTCEEB+ DTCEEA- DTCEEA+ DTC8335SH
PT02A-20-41SX PT06A-20-41PX(SR)

Carnegie Institution of Washington
The Observatories
813 Santa Barbara Street
Pasadena, California 91101
PHONE (818) 577-1122 FAX (818) 795-8136

IMACS

Title: DISPERSER TILT DRIVERS

Size: C	Scale:	Drawn By: A. Bagish	Revision:
Date: 8-Sep-2003 14:07:50		Checked By:	Sheet 36 of 90

File: C:\COCW\Imacs 16 Aug 03\Motion Control System\IMACS Motion Control July 16 2003.DDB - Documents\IMACS DT Drivers.Sch

PINS M, U, V, W, e, j NOT CONNECTED IN CABLE

DISPERSER TILT A

DTAJ2 DTAJ3 — BELDEN 9541.1 — ALPHA 65007CY.1

DTAE5V	BLK	A	A	BLK
DTAB5V	WHT	B	B	WHT
DTAE0V	RD	C	C	RD
DTAB0V	GRN	D	D	GRN
DTAE0V	ORG	E	E	ORG
DTAB0V	BLU	F	F	BLU
DTCE0V	WHT/BLK	G	G	WHT/BLK
DTAHSRET	RD/BLK	X	X	RD/BLK
DTACWHS/				
DTACCWHS/	GRN/BLK	Y	Y	GRN/BLK
DTAHS	ORG/BLK	Z	Z	ORG/BLK
DTANS/	BLU/BLK	a	a	BLU/BLK
DTACWLS/	BLK/WHT	b	b	BLK/WHT
DTACCWLS/	RD/WHT	k	k	RD/WHT
DTA24RET	GRN/WHT	m	m	GRN/WHT
DTA24VDC	BLU/WHT	n	n	BLU/WHT
DTA9541SH	SHIELD	t	t	SHIELD
DTAMBLU	1	H	H	1
DTAMRD	2	J	J	2
DTAMWHT	3	K	K	3
DTAMBRN	4	L	L	4
DTAMBLK	5	c	c	5
DTABRAKE (+)	6	d	d	6
DTABRAKE (-)	7	p	p	7
DTA9535SH	SHIELD	q	q	SHIELD

DTAJ4 DTAJ5 — BELDEN 9541.1 — ALPHA 65007CY.1

	BLK	A	A	BLK
	WHT	B	B	WHT
	RD	C	C	RD
	GRN	D	D	GRN
	ORG	E	E	ORG
	BLU	F	F	BLU
	WHT/BLK	G	G	WHT/BLK
	RD/BLK	X	X	RD/BLK
	GRN/BLK	Y	Y	GRN/BLK
	ORG/BLK	Z	Z	ORG/BLK
	BLU/BLK	a	a	BLU/BLK
	BLK/WHT	b	b	BLK/WHT
	RD/WHT	k	k	RD/WHT
	GRN/WHT	m	m	GRN/WHT
	BLU/WHT	n	n	BLU/WHT
	SHIELD	t	t	SHIELD
	1	H	H	1
	2	J	J	2
	3	K	K	3
	4	L	L	4
	5	c	c	5
	6	d	d	6
	7	p	p	7
	SHIELD	q	q	SHIELD

DTAJ6 — 24AWG — BELDEN 9541.1 — ALPHA 65007CY.1

	BLK	A	A	BLK
	WHT	B	B	WHT
	RD	C	C	RD
	GRN	D	D	GRN
	ORG	E	E	ORG
	BLU	F	F	BLU
	WHT/BLK	G	G	WHT/BLK
	RD/BLK	X	X	RD/BLK
	GRN/BLK	Y	Y	GRN/BLK
	ORG/BLK	Z	Z	ORG/BLK
	BLU/BLK	a	a	BLU/BLK
	BLK/WHT	b	b	BLK/WHT
	RD/WHT	k	k	RD/WHT
	GRN/WHT	m	m	GRN/WHT
	BLU/WHT	n	n	BLU/WHT
	SHIELD	t	t	SHIELD
	1	H	H	1
	2	J	J	2
	3	K	K	3
	4	L	L	4
	5	c	c	5
	6	d	d	6
	7	p	p	7
	SHIELD	q	q	SHIELD

N.C.

DTATB2

1	DTAE5V
2	DTAB5V
3	DTAE5V
4	DTAE0V
5	DTAB0V
6	DTAE0V
7	DTAB0V
8	DTCE0V
9	DTAE5V
10	DTAB5V
11	DTAE0V
12	DTAB0V

DTATB3

1	DTAHSRET	GRN	
2	DTACWHS/	BLK	CW
3		RD	N.O.
4	N.C.		N.C.
5		BLK	CCW
6	DTACCWHS/	RD	N.O.
7	DTAHS	GRN	N.C.
8			NEAR
9	DTANS/		CCW
10			CW
11	FWD DTACWLS/		
12	REV DTACCWLS/		
13	DTA24RET		
14	DTA24VDC		

HARD STOPS
SWITCH: Honeywell 311SM5-T

LIMIT SWITCH
SUNX GXL-H12F
PROXIMITY SENSORS

ALPHA 65007CY

25	DTAMBLU	BLU	
27	DTAMRD	RED	
29	DTAMWHT	WHT	
31	DTAMBRN	BRN	
33	DTAMBLK	BLK	
35	DTABRAKE (+)	BRAKE	
37	DTABRAKE (-)		

MYCOM PF566-AM
1.4 A/PHASE
BRAKE REMOVED

DTC J7 — DB15S / DB15P w/shell

1	0V	9	
2	0V		SET-UP
3	ALARM -	11	
4	ALARM +	13	
5	INDX-	12	
6	INDX+	14	
7	B-	15	
8	B+		
9	A-		
10	A+		
11	5V		
12	5V		
13	INNER SHIELD		
14	5V		
15			

OUTER SHIELD

RENISHAW
ENCODER INTERFACE
PART NO. RGB25Y00R00

ENCODER HEAD:
RGH25U50J00A 0.1 MICRON RES.

1	PNK	5	YEL	9	WHT 13
2		6	GRN	10	14
3	BRN	7		11	15 SHD
4	BLU	8	RED	12	

BELDEN 8335.PINS M, U, V, W, *e, *j NOT USED — BELDEN 8335

DTAE1V BLU/WHT N — WHT/BLU P — DTCE5V 7
DTAB1V WHT/BLU P — ORG/WHT R — DTCE5V 2
DTAE4L+ WHT/ORG R — WHT/ORG S — DTCE4L+ 3
DTAE4L- ORG/WHT S — GRN/WHT T — DTCE4L- 11
DTAE5- GRN/WHT T — WHT/GRN f — DTCE5- 4
DTAB5- WHT/GRN f — BRN/WHT g — DTCE0V 12
DTAE0- BRN/WHT g — WHT/BRN h — DTCE5- 5
DTAB0- WHT/BRN h — GRY/WHT j — DTCE0- 13
DTAE5+ GRY/WHT j — WHT/GRY r — DTCE4L+ 6
DTAB5+ WHT/GRY r — DTCE4L+ 14
DTA8135SH SHIELD s — SHIELD 15

PT06A-20-41S(SR) PTB-20-41PS PT06A-20-41P(SR) THRU RACK BULKHEAD
PT06A-20-41S(SR) PTB-20-41PS PT06A-20-41P(SR) THRU INSTRUMENT BULKHEAD
PT06A-20-41S(SR) PT06A-20-41P(SR) PTB-20-41PS

BELDEN 8335

DTC J7 — DB15S / DB15P w/shell

1	0V	9	
2	0V		SET-UP
3	ALARM -	11	
4	ALARM +	13	
5	INDX-	12	
6	INDX+	14	
7	B-	15	
8	B+		
9	A-		
10	A+		
11	5V		
12	5V		
13	INNER SHIELD		
14	5V		
15			

OUTER SHIELD

RENISHAW
ENCODER INTERFACE
PART NO. RGB25Y00R00

ENCODER HEAD:
RGH25U50J00A 0.1 MICRON RES.

1	PNK	5	YEL	9	WHT 13
2		6	GRN	10	14
3	BRN	7		11	15 SHD
4	BLU	8	RED	12	

DISPERSER TILT B

DTBJ2 DTBJ3 — BELDEN 9541.2 — ALPHA 65007CY.2

DTBE5V	BLK	A	A	BLK
DTBB5V	WHT	B	B	WHT
DTBE5V	RD	C	C	RD
DTBB0V	GRN	D	D	GRN
DTBE0V	ORG	E	E	ORG
DTBB0V	BLU	F	F	BLU
DTBB0V	WHT/BLK	G	G	WHT/BLK
DTBHSRET	RD/BLK	X	X	RD/BLK
DTBCWHS/				
DTBCCWHS/	GRN/BLK	Y	Y	GRN/BLK
DTBHS	ORG/BLK	Z	Z	ORG/BLK
DTBNS/	BLU/BLK	a	a	BLU/BLK
DTBCWLS/	BLK/WHT	b	b	BLK/WHT
DTBCCWLS/	RD/WHT	k	k	RD/WHT
DTB24RET	GRN/WHT	m	m	GRN/WHT
DTB24VDC	BLU/WHT	n	n	BLU/WHT
DTB9541SH	SHIELD	t	t	SHIELD
DTBMBLU	1	H	H	1
DTBMRD	2	J	J	2
DTBMWHT	3	K	K	3
DTBMBRN	4	L	L	4
DTBMBLK	5	c	c	5
DTBBRAKE (+)	6	d	d	6
DTBBRAKE (-)	7	p	p	7
DTB9500SH	SHIELD	q	q	SHIELD

DTBJ4 DTBJ5 — BELDEN 9541.2 — ALPHA 65007CY.2

	BLK	A	A	BLK
	WHT	B	B	WHT
	RD	C	C	RD
	GRN	D	D	GRN
	ORG	E	E	ORG
	BLU	F	F	BLU
	WHT/BLK	G	G	WHT/BLK
	RD/BLK	X	X	RD/BLK
	GRN/BLK	Y	Y	GRN/BLK
	ORG/BLK	Z	Z	ORG/BLK
	BLU/BLK	a	a	BLU/BLK
	BLK/WHT	b	b	BLK/WHT
	RD/WHT	k	k	RD/WHT
	GRN/WHT	m	m	GRN/WHT
	BLU/WHT	n	n	BLU/WHT
	SHIELD	t	t	SHIELD
	1	H	H	1
	2	J	J	2
	3	K	K	3
	4	L	L	4
	5	c	c	5
	6	d	d	6
	7	p	p	7
	SHIELD	q	q	SHIELD

DTBJ6 — BELDEN 9541.2 — ALPHA 65007CY.2

	BLK	A	A	BLK
	WHT	B	B	WHT
	RD	C	C	RD
	GRN	D	D	GRN
	ORG	E	E	ORG
	BLU	F	F	BLU
	WHT/BLK	G	G	WHT/BLK
	RD/BLK	X	X	RD/BLK
	GRN/BLK	Y	Y	GRN/BLK
	ORG/BLK	Z	Z	ORG/BLK
	BLU/BLK	a	a	BLU/BLK
	BLK/WHT	b	b	BLK/WHT
	RD/WHT	k	k	RD/WHT
	GRN/WHT	m	m	GRN/WHT
	BLU/WHT	n	n	BLU/WHT
	SHIELD	t	t	SHIELD
	1	H	H	1
	2	J	J	2
	3	K	K	3
	4	L	L	4
	5	c	c	5
	6	d	d	6
	7	p	p	7
	SHIELD	q	q	SHIELD

N.C.

DTBTB2

1	DTBE5V
2	DTBB5V
3	DTBE5V
4	DTBE0V
5	DTBB0V
6	DTBE0V
7	DTBB0V
8	DTCE0V
9	DTBE5V
10	DTBB5V
11	DTBE0V
12	DTBB0V

DTBTB3

1	DTBHSRET	GRN	
2	DTBCWHS/	BLK	CW
3		RD	N.O.
4	N.C.		N.C.
5		BLK	CCW
6	DTBCCWHS/	RD	N.O.
7	DTBHS	GRN	N.C.
8			NEAR
9	DTBNS/		CCW
10			CW
11	FWD DTBCWLS/		
12	REV DTBCCWLS/		
13	DTB24RET		
14	DTB24VDC		

HARD STOPS
SWITCH: Honeywell 311SM5-T

LIMIT SWITCH
SUNX GXL-H12F
PROXIMITY SENSORS

ALPHA 65007CY

25	DTBMBLU	BLU	
27	DTBMRD	RED	
29	DTBMWHT	WHT	
31	DTBMBRN	BRN	
33	DTBMBLK	BLK	
35	DTBBRAKE (+)	BRAKE	
37	DTBBRAKE (-)		

MYCOM PF566-AM
BRAKE REMOVED

DTC J7 — DB15S / DB15P w/shell

1	0V	9	
2	0V		SET-UP
3	ALARM -	11	
4	ALARM +	13	
5	INDX-	12	
6	INDX+	14	
7	B-	15	
8	B+		
9	A-		
10	A+		
11	5V		
12	5V		
13	INNER SHIELD		
14	5V		
15			

OUTER SHIELD

RENISHAW
ENCODER INTERFACE
PART NO. RGB25Y00R00

ENCODER HEAD:
RGH25U50J00A 0.1 MICRON RES.

1	PNK	5	YEL	9	WHT 13
2		6	GRN	10	14
3	BRN	7		11	15 SHD
4	BLU	8	RED	12	

DISPERSER TILT C

DTCJ2 DTCJ3 — BELDEN 9541.3 — ALPHA 65007CY.3

DTCE5V	BLK	A	A	BLK
DTCB5V	WHT	B	B	WHT
DTCE5V	RD	C	C	RD
DTCB0V	GRN	D	D	GRN
DTCE0V	ORG	E	E	ORG
DTCB0V	BLU	F	F	BLU
DTCB0V	WHT/BLK	G	G	WHT/BLK
DTCHSRET	RD/BLK	X	X	RD/BLK
DTCCWHS/				
DTCCCWHS/	GRN/BLK	Y	Y	GRN/BLK
DTCHS	ORG/BLK	Z	Z	ORG/BLK
DTCNS/	BLU/BLK	a	a	BLU/BLK
DTCCWLS/	BLK/WHT	b	b	BLK/WHT
DTCCCWLS/	RD/WHT	k	k	RD/WHT
DTC24RET	GRN/WHT	m	m	GRN/WHT
DTC24VDC	BLU/WHT	n	n	BLU/WHT
DTC9541SH	SHIELD	t	t	SHIELD
DTCMBLU	1	H	H	1
DTCMRD	2	J	J	2
DTCMWHT	3	K	K	3
DTCMBRN	4	L	L	4
DTCMBLK	5	c	c	5
DTCBRAKE (+)	6	d	d	6
DTCBRAKE (-)	7	p	p	7
DTC9500SH	SHIELD	q	q	SHIELD

DTCJ4 DTCJ5 — BELDEN 9541.3 — ALPHA 65007CY.3

	BLK	A	A	BLK
	WHT	B	B	WHT
	RD	C	C	RD
	GRN	D	D	GRN
	ORG	E	E	ORG
	BLU	F	F	BLU
	WHT/BLK	G	G	WHT/BLK
	RD/BLK	X	X	RD/BLK
	GRN/BLK	Y	Y	GRN/BLK
	ORG/BLK	Z	Z	ORG/BLK
	BLU/BLK	a	a	BLU/BLK
	BLK/WHT	b	b	BLK/WHT
	RD/WHT	k	k	RD/WHT
	GRN/WHT	m	m	GRN/WHT
	BLU/WHT	n	n	BLU/WHT
	SHIELD	t	t	SHIELD
	1	H	H	1
	2	J	J	2
	3	K	K	3
	4	L	L	4
	5	c	c	5
	6	d	d	6
	7	p	p	7
	SHIELD	q	q	SHIELD

DTCJ6 — BELDEN 9541.3 — ALPHA 65007CY.3

	BLK	A	A	BLK
	WHT	B	B	WHT
	RD	C	C	RD
	GRN	D	D	GRN
	ORG	E	E	ORG
	BLU	F	F	BLU
	WHT/BLK	G	G	WHT/BLK
	RD/BLK	X	X	RD/BLK
	GRN/BLK	Y	Y	GRN/BLK
	ORG/BLK	Z	Z	ORG/BLK
	BLU/BLK	a	a	BLU/BLK
	BLK/WHT	b	b	BLK/WHT
	RD/WHT	k	k	RD/WHT
	GRN/WHT	m	m	GRN/WHT
	BLU/WHT	n	n	BLU/WHT
	SHIELD	t	t	SHIELD
	1	H	H	1
	2	J	J	2
	3	K	K	3
	4	L	L	4
	5	c	c	5
	6	d	d	6
	7	p	p	7
	SHIELD	q	q	SHIELD

N.C.

DTCTB2

1	DTCE5V
2	DTCB5V
3	DTCE5V
4	DTCE0V
5	DTCB0V
6	DTCE0V
7	DTCB0V
8	DTCE0V
9	DTCE5V
10	DTCB5V
11	DTCE0V
12	DTCB0V

DTCTB3

1	DTCHSRET	GRN	
2	DTCCWHS/	BLK	CW
3		RD	N.O.
4	N.C.		N.C.
5		BLK	CCW
6	DTCCCWHS/	RD	N.O.
7	DTCHS	GRN	N.C.
8			NEAR
9	DTCNS/		CCW
10			CW
11	FWD DTCCWLS/		
12	REV DTCCCWLS/		
13	DTC24RET		
14	DTC24VDC		

HARD STOPS
SWITCH: Honeywell 311SM5-T

LIMIT SWITCH
SUNX GXL-H12F
PROXIMITY SENSORS

ALPHA 65007CY

25	DTCMBLU	BLU	
27	DTCMRD	RED	
29	DTCMWHT	WHT	
31	DTCMBRN	BRN	
33	DTCMBLK	BLK	
35	DTCBRAKE (+)	BRAKE	
37	DTCBRAKE (-)		

MYCOM PF566-AM
BRAKE REMOVED

DTC J7 — DB15S / DB15P w/shell

1	0V	9	
2	0V		SET-UP
3	ALARM -	11	
4	ALARM +	13	
5	INDX-	12	
6	INDX+	14	
7	B-	15	
8	B+		
9	A-		
10	A+		
11	5V		
12	5V		
13	INNER SHIELD		
14	5V		
15			

OUTER SHIELD

RENISHAW
ENCODER INTERFACE
PART NO. RGB25Y00R00

ENCODER HEAD:
RGH25U50J00A 0.1 MICRON RES.

1	PNK	5	YEL	9	WHT 13
2		6	GRN	10	14
3	BRN	7		11	15 SHD
4	BLU	8	RED	12	

BELDEN 8335.PINS M, U, V, W, *e, *j NOT USED — BELDEN 8335

DTCE1V BLU/WHT N — WHT/BLU P — DTCE5V 7
DTCB1V WHT/BLU P — ORG/WHT R — DTCE5V 2
DTCE4L+ WHT/ORG R — WHT/ORG S — DTCE4L+ 3
DTCE4L- ORG/WHT S — GRN/WHT T — DTCE4L- 11
DTCE5- GRN/WHT T — WHT/GRN f — DTCE5- 4
DTCB5- WHT/GRN f — BRN/WHT g — DTCE0V 12
DTCE0- BRN/WHT g — WHT/BRN h — DTCE5- 5
DTCB0- WHT/BRN h — GRY/WHT j — DTCE0- 13
DTCE5+ GRY/WHT j — WHT/GRY r — DTCE4L+ 6
DTCB5+ WHT/GRY r — DTCE4L+ 14
DTCB135SH SHIELD s — SHIELD 15

PT06A-20-41S(SR) PTB-20-41PSX PT06A-20-41PX(SR) THRU RACK BULKHEAD
PT06A-20-41S(SR) PTB-20-41PSX PT06A-20-41PX(SR) THRU INSTRUMENT BULKHEAD
PT06A-20-41S(SR) PT06A-20-41P(SR) PTB-20-41PS

BELDEN 8335

DTC J7 — DB15S / DB15P w/shell

1	0V	9	
2	0V		SET-UP
3	ALARM -	11	
4	ALARM +	13	
5	INDX-	12	
6	INDX+	14	
7	B-	15	
8	B+		
9	A-		
10	A+		
11	5V		
12	5V		
13	INNER SHIELD		
14	5V		
15			

OUTER SHIELD

RENISHAW
ENCODER INTERFACE
PART NO. RGB25Y00R00

ENCODER HEAD:
RGH25U50J00A 0.1 MICRON RES.

1	PNK	5	YEL	9	WHT 13
2		6	GRN	10	14
3	BRN	7		11	15 SHD
4	BLU	8	RED	12	

Carnegie Institution of Washington
The Observatories
813 Santa Barbara Street
Pasadena, California 91101
PHONE (818) 577-1122 FAX (818) 795-8136

IMACS

Title: Disperser Tilt

Size: C	Scale:	Drawn By: A. Bagish	Revision:
		Checked By:	Sheet 37 of 90

Date: 8-Sep-2003 14:07:51
File: C:\OCIW\Imacs 16 Aug 03\Motion Control System\IMACS Motion Control July 16 2003.DSN ... Documents\IMACS DT.Sch

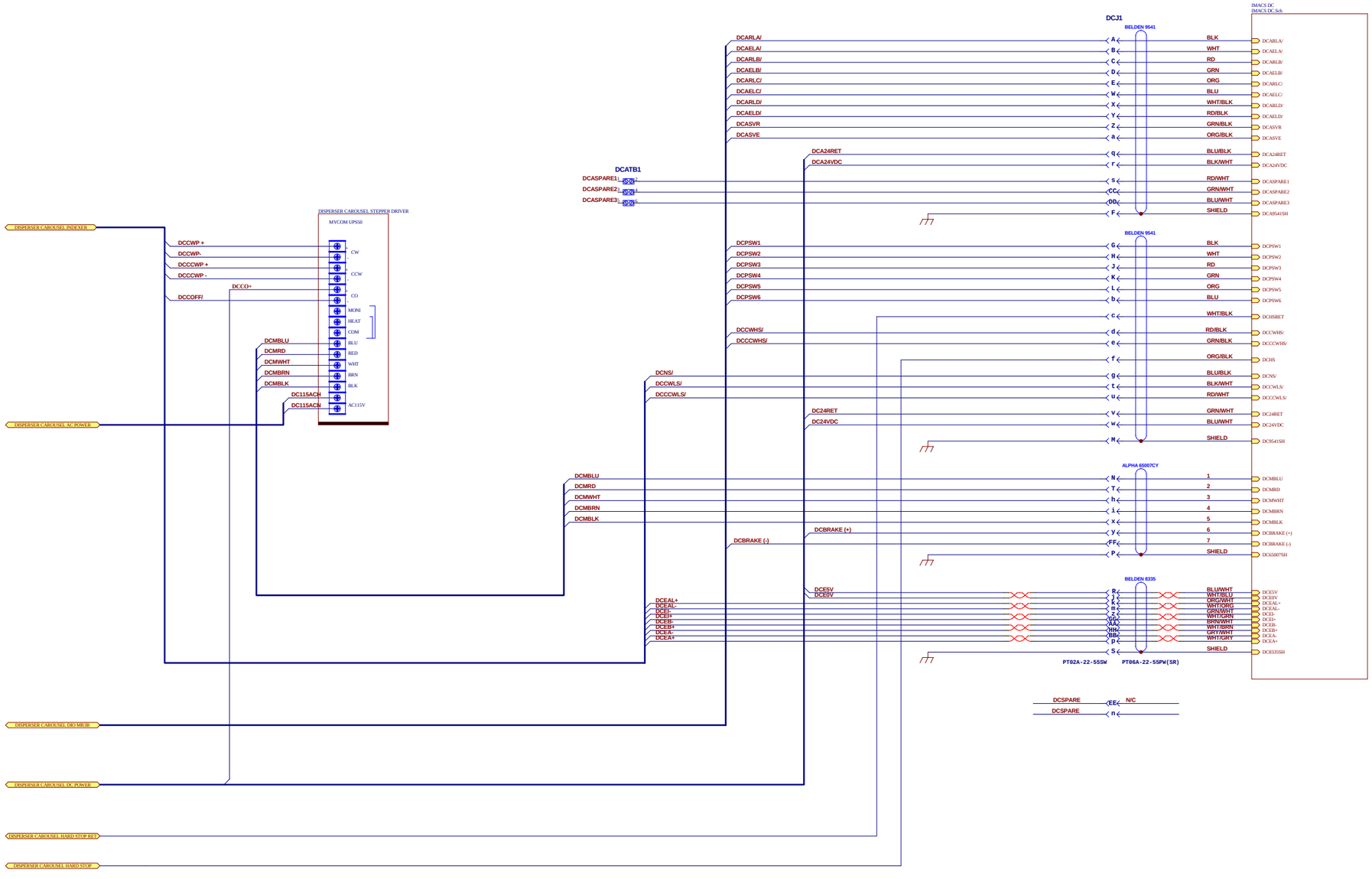

Carnegie Institution of Washington
The Observatories
813 Santa Barbara Street
Pasadena, California 91101
PHONE (818) 577-1122 FAX (818) 795-8136

IMACS

Title: DISPERSER CAROUSEL DRIVER

Size: C	Scale:	Drawn By: A. Ragish	Revision:
Date: 8-Sep-2003 14:07:53		Checked By:	Sheet 38 of 90

File: C:\OCIW\Imacs 16 Aug 03\Motion Control System@IMACS Motion Control July 16 2003.DDB - Documents\IMACS DC Driver.Sch

BACK

39

DISPERSER CLAMP ACTUATORS

EXTEND = CLAMPED

ABCD CLOCKWISE FROM BACK

A - CLOSEST TO V BLOCK

D - HARDEST TO GET TO

MSK X BELDEN 8723

BLK —— BLK

BLU —— GRN

BRN —— RED

6 EACH

BIMBA MSX X

LIMIT SWITCH

MAGNETORESISTIVE NPN (SINK) OUTPUT

NORMALLY OPEN

CABLE EXTENSION

DISPERSER CAROUSEL BRAKE

LDFJ5

6 PLACES

POSTION SENSOR
HONEYWELL 311-ST-5
MICROSWITCH

FRONT VIEW, LOOKING INTO TELESCOPE

DSS LOAD SWITCHES

LIMIT SW PART NO. TBD
DESIGN BASED ON OMRON
PROXIMITY SENSORS

MYCOM PS596-AM

LOCATED IN SQUARE GREY ABS BOX

RENISHAW ENCODER RGH 24D
5 uM

NOTE: PINS U, V EE, *n NOT USED

CHECK TO MAKE SURE SHIELD IS NOT TIED TO PIN 8 HERE!!!

Carnegie Institution of Washington
The Observatories
813 Santa Barbara Street
Pasadena, California 91101
PHONE (818) 577-1122 FAX (818) 795-8136

IMACS

Title: Disperser Carousel & Clamps

Size: C	Scale:	Drawn By: A. Bagish	Revision:
Date: 8-Sep-2003 14:07:53		Checked By:	Sheet 39 of 90

File: C:\COC\Wimacs 16 Aug 03\Motion Control System\IMACS Motion Control July 16 2003.DDB - D:\Documents\IMACS DC.Sch

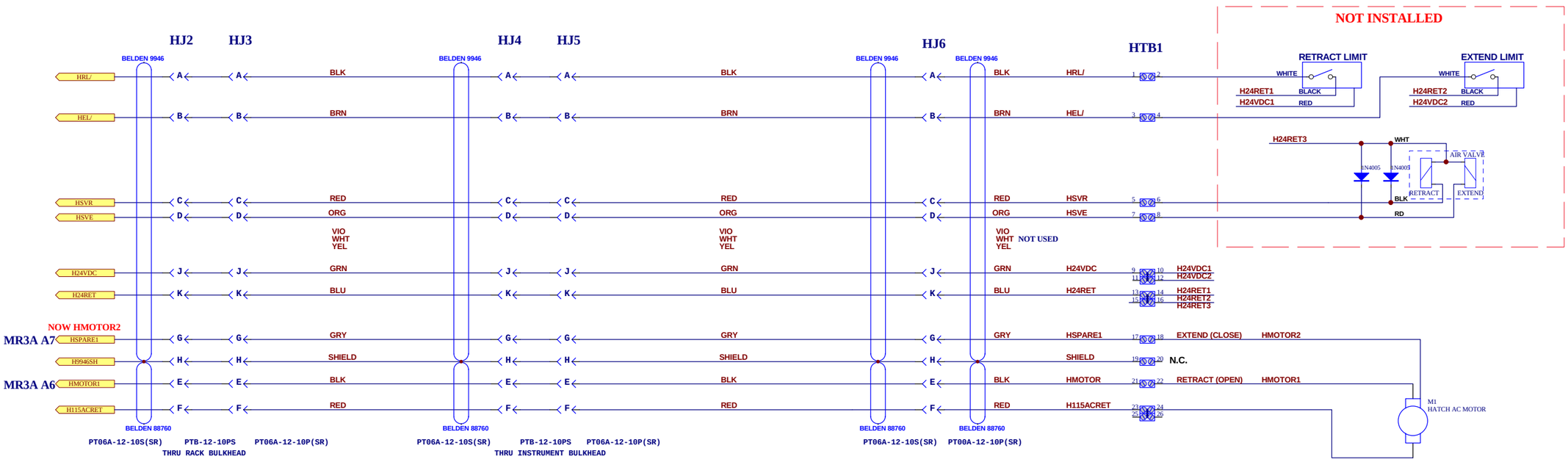

Carnegie Institution of Washington
The Observatories
813 Santa Barbara Street
Pasadena, California 91101
PHONE (818) 577-1122 FAX (818) 795-8136

IMACS

Title: Hatch

Size: C | Scale: | Drawn By: A. BAGISH | Revision:
Date: 8-Sep-2003 14:07:54 | Checked By: | Sheet 40 of 90
File: C:\OCIW\Imacs 16 Aug 03\Motion Control System\IMACS Motion Control July 16 2003.DDB - Documents\IMACS Hatch .Sch

24V TO TTL

LOGIC INVERSION CURRENT SINK DIGIKEY 767-141-R3.3K-ND NET 14PIN SMD

DIGIKEY 767-143-R15K-ND ISOLATED 14PIN SMD

DIGIKEY 750-83-R1.8K-ND ISOLATED 8 PIN SIP PIN 1 RES 1

NORMALLY LO

DTACWHS/ → DTACWHS/ R4A 15K, R9A 1.8K (+24V) → DTACWHS24/ R5A 3.3K → +5V → Q1 2SD1277

DTACCWHS/ → DTACCWHS/ R4B 15K, R9B 1.8K (+24V) → DTACCWHS24/2 R5B 3.3K → +5V → Q2 2SD1277

DTBCWHS/ → DTBCWHS/ R4C 15K, R9C 1.8K (+24V) → DTBCWHS24/ 3 R5C 3.3K → +5V → Q3 2SD1277

DTBCCWHS/ → DTBCCWHS/ R4D 15K, R9D 1.8K (+24V) → DTBCCWHS24/4 R5D 3.3K → +5V → Q4 2SD1277

DTCCWHS/ → DTCCWHS/ R4E 15K, R10A 1.8K (+24V) → DTCCWHS24/ 5 R5E 3.3K → +5V → Q5 2SD1277

DTCCCWHS/ → DTCCCWHS/ R4F 15K, R10B 1.8K (+24V) → DTCCCWHS24/6 R5F 3.3K → +5V → Q6 2SD1277

DIGIKEY 767-143-R15K-ND

DCCWHS/ → R6A 15K, R10C 1.8K (+24V) → DCCWHS24/ 7 R5G 3.3K → +5V → Q7 2SD1277

DIGIKEY 750-83-R1.8K-ND

DCCCWHS/ → R6B 15K, R10D 1.8K (+24V) → DCCCWHS24/ 8 R5H 3.3K → +5V → Q8 2SD1277

IN1_24V SPARE FROM J1-75 → R6C 15K, R11A 1.8K (+24V) → 5 9 R5I 3.3K → +5V → Q9 2SD1277

IN2_24V SPARE FROM J1-76 → R6D 15K, R11B 1.8K (+24V) → 6 10 R5J 3.3K → +5V → Q10 2SD1277

IN3_24V SPARE FROM J1-77 → R6E 15K, R11C 1.8K (+24V) → 7 11 R5K 3.3K → +5V → Q11 2SD1277

IN4_24V SPARE FROM J1-78 → R6F 15K, R11D 1.8K (+24V) → 8 12 R5L 3.3K → +5V → Q12 2SD1277

FROM ALTERA NORMALLY LO (BRAKE ON)

LIMIT SWITCHES

NORMALLY HI

+24V → R 1K → OPTO22 INPUT SNAP-IDC5 → HS → SW SPST NC

2SD1277 (B C E)

C B E — TOP VIEW

TTL TO 24V

24V CURRENT SINK

DIGIKEY 767-143-R3.9K-ND ISOLATED 14PIN SMD

DTABRAKE 1 → R7A 470 → 14 Q13 2SD1277 → DTABRAKE(-) → DTABRAKE(-)2 TO OPTO22 MODULE RACK 3A M8-11.2

DTBBRAKE 2 → R7B 470 → 13 Q14 2SD1277 → DTBBRAKE(-) → DTBBRAKE(-)2 TO OPTO22 MODULE RACK 3A M8-11.4

DTCBRAKE 3 → R7C 470 → 12 Q15 2SD1277 → DTCBRAKE(-) → DTCBRAKE(-)2 TO OPTO22 MODULE RACK 3A M8-11.6

DCBRAKE 4 → R7D 470 → 11 Q16 2SD1277 → DCBRAKE(-) → DCBRAKE(-)2 TO OPTO22 MODULE RACK 3B M16-19.2

BRAKES CONSUME 170 mA CUURENT WHEN RELEASED
FAILSAFE BRAKE: ON WHEN NOT ENERGIZED
NORMALLY HI (BRAKE ON)

OUTPUT IS IN SERIES WITH OPTO22 SINK MODULE

TO J1-39 2 → SPARE FROM ALTERA → 5 R7E 470 → 10 Q17 2SD1277 → OUT1_24V → SPARE TO J1-71

OUT1_24V2 → SPARE TO J1-72

TO J1-40 3 → SPARE FROM ALTERA → 6 R7F 470 → 9 Q18 2SD1277 → OUT2_24V → SPARE TO J1-73

OUT2_24V2 → SPARE TO J1-74

C12 1uF; +5V → R8E 3.3K → 14, 5 POR

R8A 3.3K → 1 DTCCO/

R8B 3.3K → 2 DTACO/

R8C 3.3K → 3 DTBCO/

R8M 3.3K → 13 DCCO/

DIGIKEY 767-141-R3.3K-ND NET 14PIN SMD

FRONT PANEL OVER-RIDE SWITCHES

SW1 SW SPST → DTCOVRD/ R8L 3.3K → J1-25 → +5V

SW2 SW SPST → DTAOVRD/ R8I 3.3K → J1-9 → +5V

SW3 SW SPST → DTBOVRD/ R8J 3.3K → J1-17 → +5V

SW4 SW SPST → DCOVRD/ R8K 3.3K → J1-33 → +5V

BR1 BRAKE → +24V

BRAKE(-) → Q19 NPN DAR

HARD STOP & HARD STOP OVER-RIDE NORMALLY HI (BRAKE CONTROLLED BY COMPUTER) → BRAKE(-)2

COMPUTER NORMALLY LO (BRAKE ON) → Q20 NPN

CHECKSUM = 001DBEFF

U1 — ALTERA EPM7128SLC84-7

C1 DTACWHS24/ 12, +5V, TDI 14, DTCOVRD/ 15, 2 16, DTACCWHS24/ 17, DCCCWHS24/ 18, DGND 19, DCCO/ 20, DCCWHS24/ 21, 3 22, TMS 23, 4 24, 5 25, +5V 26, DCOVRD/ 27, 6 28, DTBOVRD/ 29, 7 30, 8 31, DGND 32 — 0.1uF

C2 0.1uF

C3 0.1uF

C4 0.1uF

C5 0.1uF

C6 0.1uF

C7 0.1uF

C8 0.1uF

C9 22uF; +5V

I/O: DTACWHS24/ DTBCWHS24/ DTCCWHS24/ DTACCWHS24/ DTACO/ DTBCWHS24/ DGND POR DGND DCCO/ DTACOFF/ DTACBRAKE DTABRAKE DTBCOFF/ DTBCBRAKE DTBBRAKE DTCCOFF/ DTCCBRAKE DTCBRAKE DCCOFF/ VCCINT GND GLOBAL I/O GND GLOBAL I/O GND VCCIO TDO TCK TMS DTBOVRD/ DTCOVRD/ DCOVRD/ +5V DCCWHS24/ DCCCWHS24/ DTCCWHS24/ DTBCWHS24/ DTACWHS24/

74 DTBCOFF/, 73 DTCBRAKE, 72 DGND, 71 TDO, 70 37, 69 36, 68 35, 67 34, 66 +5V, 65 33, 64 32, 63 31, 62 TCK, 61 30, 60 29, 59 DGND, 58 28, 57 27, 56 26, 55 25, 54 24

SPARE ALTERA I/O

J1 — PHOENIX80

1	DGND	
2	DTCCO/	← FROM INDEXER TO DRIVER
3	DTCCOFF/	← FROM INDEXER TO DRIVER
4	DTCCWHS24/	
5	DTCCWHS/	
6	DTCCCWHS24/	
7	DTCCCWHS/	
8	DTCBRAKE(-)	FROM BRAKE TO OPTO 22
9	DTCBRAKE(-)2	
10	DTCOVRD/ SW1	
11	DTACO/	← FROM INDEXER TO DRIVER
12	DTACOFF/	← FROM INDEXER TO DRIVER
13	DTACWHS24/	
14	DTACWHS/	
15	DTACCWHS24/	
16	DTACCWHS/	
17	DTABRAKE(-)	FROM BRAKE TO OPTO 22
18	DTABRAKE(-)2	
19	DTAOVRD/ SW2	
20	DTBCO/	← FROM INDEXER TO DRIVER
21	DTBCOFF/	← FROM INDEXER TO DRIVER
22	DTBCWHS24/	
23	DTBCWHS/	
24	DTBCCWHS24/	
25	DTBCCWHS/	
26	DTBBRAKE(-)	FROM BRAKE TO OPTO 22
27	DTBBRAKE(-)2	
28	DTBOVRD/ SW3	
29	DCCO/	← FROM INDEXER TO DRIVER
30	DCCOFF/	← FROM INDEXER TO DRIVER
31	DCCWHS24/	
32	DCCWHS/	
33	DCCCWHS24/	
34	DCCCWHS/	
35	DCBRAKE(-)	FROM BRAKE TO OPTO 22
36	DCBRAKE(-)2	
37	DCOVRD/ SW4	
38	POR	
39	2	
40	3	
41	4	
42	5	
43	6	
44	7	
45	8	
46	9 DTCHS/	TO HARDSTOP LED'S
47	10 DTAHS/	TO HARDSTOP LED'S
48	11 DTBHS/	TO HARDSTOP LED'S
49	12	
50	13 DCHS/	TO HARDSTOP LED'S
51	14	
52	15	
53	16	
54	17	
55	18	
56	19	
57	20	
58	21	
59	22	
60	23	
61	24	
62	25	
63	26	
64	27	
65	28	
66	29	
67	30	
68	31	
69	32	
70	36	37, 38
71	OUT1_24V	SPARE LEVEL SHIFTER 5V TO 24V
72	OUT1_24V2	
73	OUT2_24V	SPARE LEVEL SHIFTER 5V TO 24V
74	OUT2_24V2	
75	IN1_24V	SPARE LEVEL SHIFTER 24V TO 5V
76	IN2_24V	SPARE LEVEL SHIFTER 24V TO 5V
77	IN3_24V	SPARE LEVEL SHIFTER 24V TO 5V
78	IN4_24V	SPARE LEVEL SHIFTER 24V TO 5V
79		
80	+5V	

TO HARDSTOP LED'S

PROGRAMMING HEADER

+5V → R2 1K → TCK, TDO, TMS, TDI; R3 1K; R1 1K → +5V

JP1 HEADER 5X2: 1 2 / 3 4 / 5 6 / 7 8 / 9 10 → +5V

J2 PHOENIX 2PIN: 1 +5V IN, 2 DGND

+5V IN → L1 FERRITE → F1 .7 → TVSS1 10V → DGND

C10 22uF; TP1 +5V; TP2 DGND

R12 220 → LED1 +5V

C11 .1 uF → +5V

Carnegie Institution of Washington
The Observatories
813 Santa Barbara Street
Pasadena, California 91101
PHONE (818) 577-1122 FAX (818) 795-8136

IMACS

Title: IMACS CHASSIS 3 ALTERA LOGIC BOARD

Size:	Scale:	Drawn By:	Revision:
C		A. BAGISH	
Date: 8-Sep-2003 14:07:55		Checked By:	Sheet 41 of 90

File: C:\OCIW\Imacs 16 Aug 03\Motion Control System\IMACS Motion Control July 16 2003.DDB - Documents\Chassis 3 Altera Logic.Sch

BACK

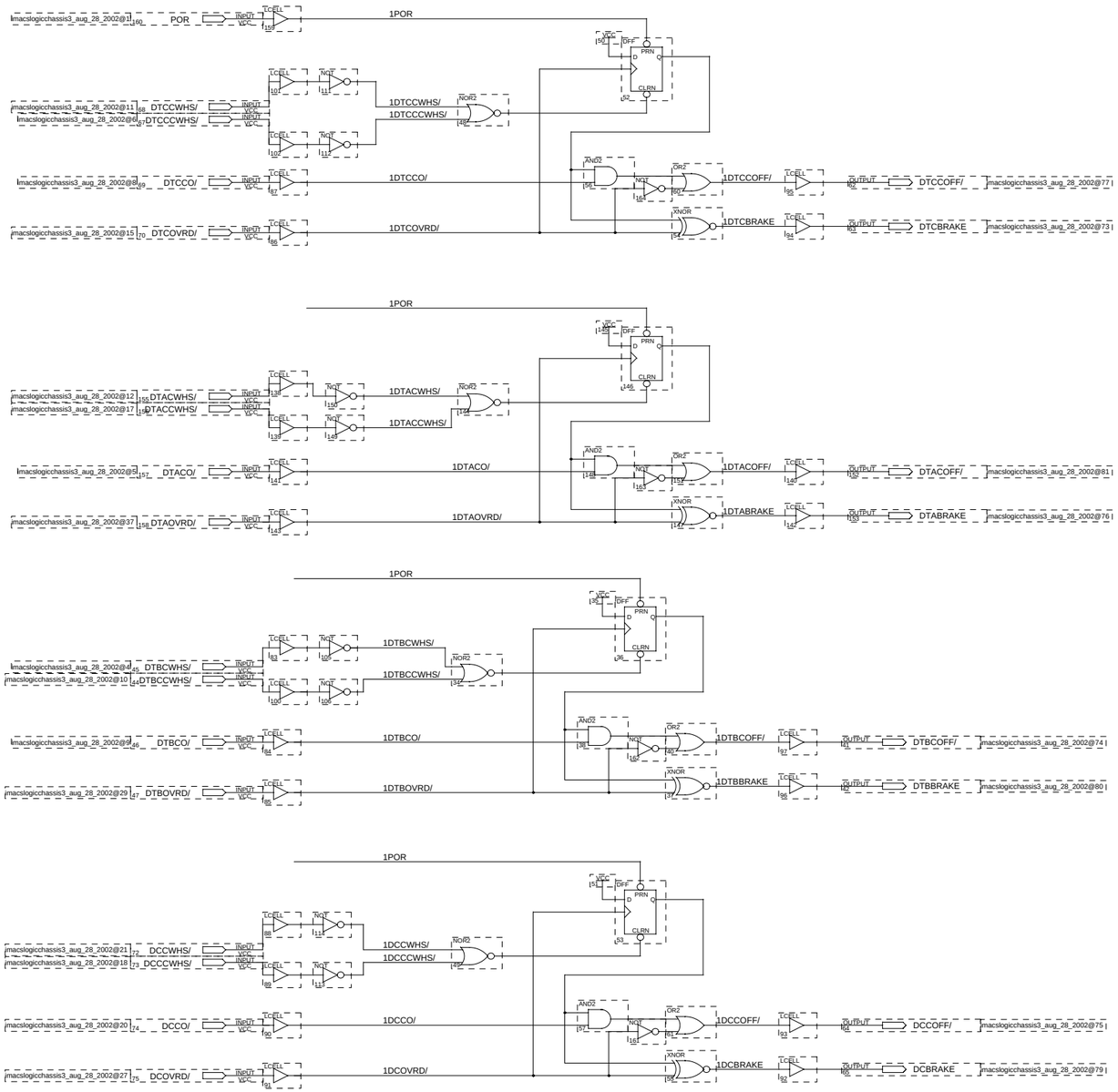

SETS HARD STOPS TO N.C. (GND)
CHECKSUM 001DC1F7

DIO MODULES RACK 4A
IMACS DIO MR4A Sch

TERMINATES AT: COMPUTER CHASSIS
CBDS P1

DIO MR4A
MR4A POWER

LDF & SDF BRAKE(-)2
LONG CAMERA DIO MR4A
DRIVER 2 & 3 HARD STOPS
SHORT CAMERA DIO MR4A

5VDC1
5RET1
24VDC1
24RET1

DIO MODULES RACK 4B
IMACS DIO MR4B Sch

TERMINATES AT: COMPUTER CHASSIS
CBDS P2

DIO MR4B
MR4B POWER

5VDC2
5RET2
24VDC2
24RET2

TERMINATES AT: COMPUTER CHASSIS
ENTERPRISE INDEXER P1

SET INDEXER A & B FOR SINGLE-ENDED OUTPUT

PHOTOCOUPLER (1 CLOCK)

LINE DRIVER (2 CLOCK)

A PULSE +	1	2	
APULSE -			LDFCLK/
A DIR +	3	4	
A DIR -			LDFDIR/
A EXCITATION OFF	5	6	LDFCO/
A SERVO ON/OFF			
A DEVIATION COUNTER RESET	7	8	
A IN POSITION			
A ALARM	9	10	
A NEAR HOME			
A FORWARD LIMIT	11	12	LDFCWLS/
A REVERSE LIMIT			LDFCCWLS/
A GENERAL PURPOSE INPUT	13	14	
A A-PHASE SIGNAL +			LDFEA-
A A-PHASE SIGNAL -	15	16	LDFEA+
A B-PHASE SIGNAL +			LDFEB+
A B-PHASE SIGNAL -	17	18	LDFEB-
A Z-PHASE SIGNAL +			LDFEI+
A Z-PHASE SIGNAL -	19	20	LDFEI-
B PULSE +			
BPULSE -	21	22	SDFCLK/
B DIR +			
B DIR -	23	24	SDFDIR/
B EXCITATION OFF			SDFCO/
B SERVO ON/OFF	25	26	
B DEVIATION COUNTER RESET			
B IN POSITION	27	28	
B ALARM			
B NEAR HOME	29	30	
B FORWARD LIMIT			SDFCWLS/
B REVERSE LIMIT	31	32	SDFCCWLS/
B GENERAL PURPOSE INPUT			
B A-PHASE SIGNAL +	33	34	SDFEA-
B A-PHASE SIGNAL -			SDFEA+
B B-PHASE SIGNAL +	35	36	SDFEB+
B B-PHASE SIGNAL -			SDFEB-
B Z-PHASE SIGNAL +	37	38	SDFEI+
B Z-PHASE SIGNAL -			SDFEI-
C CW PULSE +	39	40	STRCWP +
C CW PULSE -			STRCWP-
C CCW PULSE +	41	42	STRCCWP +
C CCW PULSE -			STRCCWP -
C EXCITATION OFF	43	44	STRCO/
C SERVO ON/OFF			
C DEVIATION COUNTER RESET	45	46	
C IN POSITION			
C ALARM	47	48	
C NEAR HOME			
C FORWARD LIMIT	49	50	
C REVERSE LIMIT			
C GENERAL PURPOSE INPUT	51	52	
C A-PHASE SIGNAL +			
C A-PHASE SIGNAL -	53	54	
C B-PHASE SIGNAL +			
C B-PHASE SIGNAL -	55	56	
C Z-PHASE SIGNAL +			
C Z-PHASE SIGNAL -	57	58	
D CW PULSE +			
D CW PULSE -	59	60	
D CCW PULSE +			
D CCW PULSE -	61	62	
D EXCITATION OFF			
D SERVO ON/OFF	63	64	
D DEVIATION COUNTER RESET			
D IN POSITION	65	66	
D ALARM			
D NEAR HOME	67	68	
D FORWARD LIMIT			
D REVERSE LIMIT	69	70	
D GENERAL PURPOSE INPUT			
D A-PHASE SIGNAL +	71	72	
D A-PHASE SIGNAL -			
D B-PHASE SIGNAL +	73	74	
D B-PHASE SIGNAL -			
D Z-PHASE SIGNAL +	75	76	
D Z-PHASE SIGNAL -			
EMERGENCY STOP SIGNAL	77	78	
GND FOR ES			GND4
GND FOR ES	79	80	GND5
GND FOR ES			GND6

NOTE: REVERSAL

NOTE: REVERSAL

ALTERA LOGIC CHASSIS 4
CHASSIS 4 ALTERA LOGIC.Sch

DRIVER 1 CURRENT SHUTOFF FROM INDEXER 4
DRIVERS 2 & 3 HARD STOPS FROM DIO4A CARD
LDF & SDF BRAKE(-)2
LDF & SDF BRAKE(-)
ALTERA LOGIC CHASSIS 4 DC POWER

48VDC Power Supply
CHASSIS 4 ALTERA LOGIC.Sch

LDF & SDF Driver Supply

ALTERA5VDC

ALTERA5RET

IMACS LDF Driver
IMACS LDF Driver.Sch

LDFBRAKE(-)
LONG DETECTOR DIO MR4A
LONG DETECTOR INDEXER
LONG DETECTOR DC POWER
LONG DETECTOR AC POWER
LONG DETECTOR HARD STOP
LONG DETECTOR HARD STOP RET

IMACS SDF Driver
IMACS SDF Driver.Sch

SDFBRAKE(-)
SHORT DETECTOR DIO MR4A
SHORT DETECTOR INDEXER
SHORT DETECTOR DC POWER
SHORT DETECTOR AC POWER
SHORT DETECTOR HARD STOP
SHORT DETECTOR HARD STOP RET

STRUCTURE DRIVER
IMACS Structure Driver.Sch

STRUCTURE ROTATOR INDEXER
STRUCTURE ROTATOR DC POWER
STRUCTURE ROTATOR AC POWER

HS3
LDFHS
LDFHSRET
SDFHS
SDFHSRET
HS4

TB 115VAC NEUTRAL
SDF115ACH
LDF115ACH
STR115ACH
PS115ACH4 A

TB 115VAC
SDF115ACN
LDF115ACN
STR115ACH
PS115ACN4 J

TB 24VDC
24VDC1
24VDC2
PS24VDC4 L
SDF24VDC
SDFBRAKE (+)
LDF24VDC
LDFBRAKE (+)

TB 24RET
24RET1
24RET2
SDF24RET
LDF24RET
PS24RET4 E

TB 5VDC
5VDC1
5VDC2
SDFCO+
SDFE5V
LDFCO+
LDFE5V
PS5VDC4 C
GROUND STAR

TB 5RET
5RET1
5RET2
SDFE5V
LDFE0V
PS5RET4 D

GND4
GND5
GND6
GND1
GND2
GND3

HS3 F
HS4 H
N.C. B N.C.
N.C. K N.C.
EARTH4 G

PSJ6
BENDIX PT SERIES 1
PT06A-18-11SY(SR) PT02A-18-11PY

TERMINATES AT: POWER SUPPLY CHASSIS
CHASSIS 4 POWER

Carnegie Institution of Washington
The Observatories
813 Santa Barbara Street
Pasadena, California 91101
PHONE (818) 577-1122 FAX (818) 795-8136

IMACS

Title: CONTROL CHASSIS 4

Size: C	Scale:	Drawn By: A. Bagish	Revision:
Date: 8-Sep-2003 14:07:51		Checked By:	Sheet 42 of 90

File: C:\CW\Dwgs\ 16 Aug 03\Motion Control System\IMACS Motion Control July 16 2003.DDB - T:\Documents\IMACS Chassis 4 .Sch

TO: CONTROL CHASSIS 4

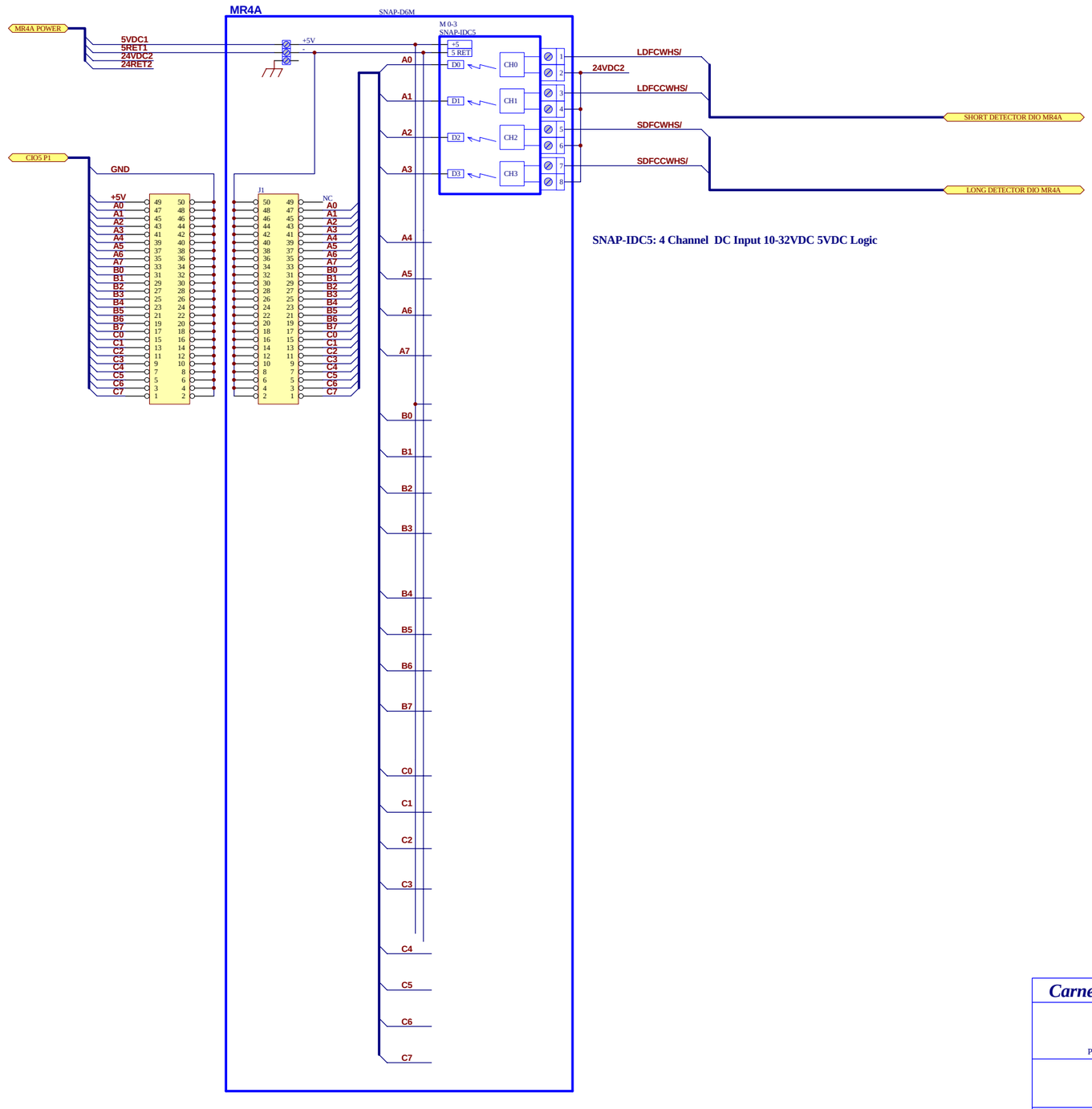

SNAP-IDC5: 4 Channel DC Input 10-32VDC 5VDC Logic

Carnegie Institution of Washington
The Observatories
813 Santa Barbara Street
Pasadena, California 91101
PHONE (818) 577-1122 FAX (818) 795-8136

IMACS

Title: Opto22 Module Rack 4A

Size: C	Scale:	Drawn By: A. BAGISH	Revision:
Date: 8-Sep-2003 14:07:56		Checked By:	Sheet 43 of 90

File: C:\OCIW\Imacs 16 Aug 03\Motion Control System\IMACS Motion Control July 16 2003.DDB - Documents\IMACS DIO MR4A.Sch

TO: CONTROL CHASSIS 4

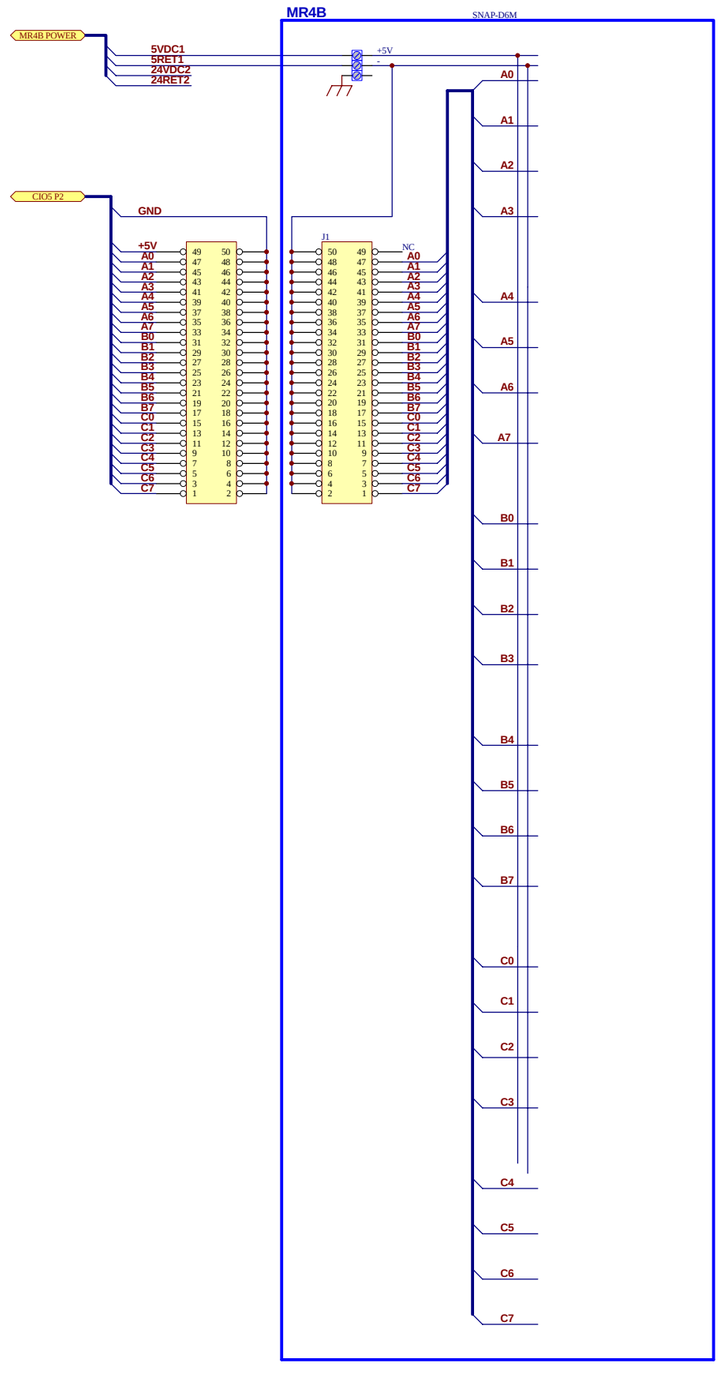

Carnegie Institution of Washington
The Observatories
813 Santa Barbara Street
Pasadena, California 91101
PHONE (818) 577-1122 FAX (818) 795-8136

IMACS

Title: Opto22 Module Rack 4B

Size: C	Scale:	Drawn By: A. BAGISH	Revision:
Date: 8-Sep-2003 14:07:56		Checked By:	Sheet 44 of 90

File: C:\OCIW\Imacs 16 Aug 03\Motion Control System\IMACS Motion Control July 16 2003.DDB - Documents\IMACS DIO MR4B.Sch

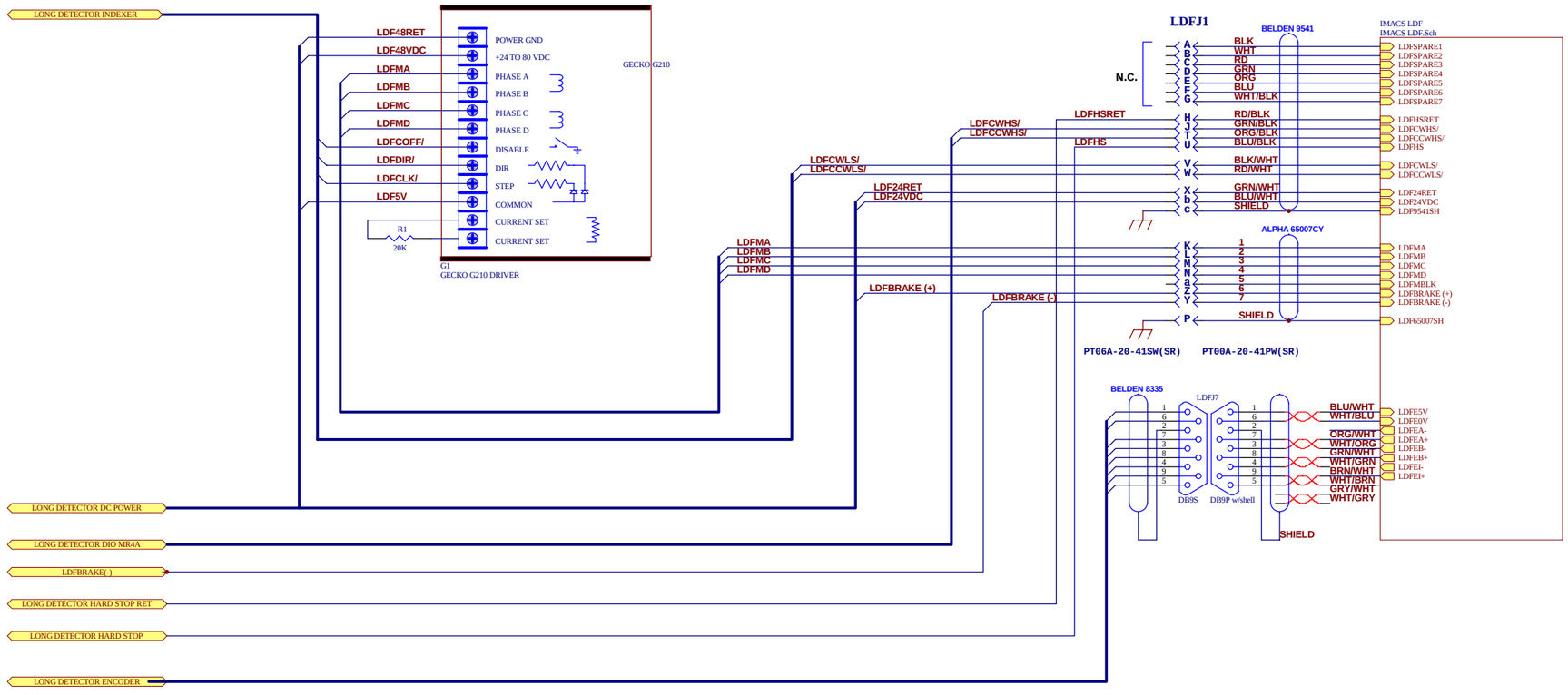

Carnegie Institution of Washington
The Observatories
813 Santa Barbara Street
Pasadena, California 91101
PHONE (818) 577-1122 FAX (818) 795-8136

IMACS

Title: Long Detector Focus Driver

Size: C	Scale:	Drawn By: A. BAGISH	Revision:
Date: 8-Sep-2003 14:07:56		Checked By:	Sheet 45 of 90

File: C:\OCIW\Imacs 16 Aug 03\Motion Control System\IMACS Motion Control July 16 2003.DDB - Documents\IMACS LDF Driver.Sch

FOCUS MOTOR AND SWITCHES MOVE WITH DEWER BETWEEN SHORT AND LONG CAMERAS

LONG DETECTOR FOCUS LIMIT

BELDEN 9541 — LDFJ2 / LDFJ3 — BELDEN 9541 — LDFJ4 / LDFJ5

LDFSPARE1	BLK	A	A		BLK		A	A
LDFSPARE2	WHT	B	B		WHT		B	B
LDFSPARE3	RD	C	C		RD		C	C
LDFSPARE4	GRN	D	D		GRN		D	D
LDFSPARE5	ORG	E	E		ORG		E	E
LDFSPARE6	BLU	F	F		BLU		F	F
LDFSPARE7	WHT/BLK	G	G		WHT/BLK		G	G
LDFHSRET	RED/BLK	H	H	RETURN	RED/BLK	RET	H	H
LDFCWHS/	GRN/BLK	J	J	REVERSE HARD STOP	GRN/BLK	RH	J	J
LDFCCWHS/	ORG/BLK	T	T	FORWARD HARD STOP	ORG/BLK	FH	T	T
LDFHS	BLU/BLK	U	U		BLU/BLK		U	U
LDFCWLS/	BLK/WHT	V	V	REVERSE SOFT STOP	BLK/WHT	RS	V	V
		R	R				R	R
		S	S				S	S
LDF24RET	RD/WHT	W	W		RD/WHT		W	W
LDFCCWLS/	GRN/WHT	X	X	FORWARD SOFT STOP	GRN/WHT	FS	X	X
LDF24VDC	BLU/WHT	b	b		BLU/WHT		b	b
LDF9541SH	SHIELD	C	C		SHIELD		C	C

BELDEN 9541 — LDFJ6

1 J	GRN/BLK	1	RD	LDFCWHS/
2 V	BLK/WHT	6	BLK	
3 X	RED/WHT	2	RD	LDFCWLS/
4 T	ORG/BLK	7	BLK	
5 H	RED/BLK	3	RD	LDFHSRET
		8	BLK	
		4	RD	LDFCCWLS/
		9	BLK	
		5	GRN	LDFCCWHS/

DB9P — DB9S — DB9P — DB9S w/shell

DB9MF BULKHEAD

LDFCWHS/	BLK / RD	CW	GRN — SW1 HARD STOP
LDFCWLS/	BLK / RD	CCW	GRN — SW2 SOFT STOP
LDFHSRET	BLK / RD	CW	GRN — SW3 SOFT STOP
LDFCCWHS/	BLK / RD	CCW	GRN — SW4 HARD STOP

N.O. / N.C. — Honeywell 311SM5-T

PHYTRON ZSS32.200.1,2

LDFMA	W1 RED	B	E — W3 YELLOW
LDFMB	W1 BROWN	G	A — W3 BLACK
LDFMC	W4 BLUE	C	F — W2 GREEN
LDFMD	W4 VIOLET	H	D — W2 WHITE

M1 — M — PHYTRON MOTOR

LONG DETECTOR FOCUS MOTOR

BELDEN 8777 — BELDEN 8777 — BELDEN 8777

LDFMA	RED	K	K		RED		K	K
LDFMB	BLACK	L	L		BLACK		L	L
LDFMC	WHT	M	M		WHT		M	M
LDFMD	BLK	N	N		BLK		N	N
LDFSPARE1	GRN	a	a		GRN		a	a
LDFSPARE2	BLK	Z	Z		BLK		Z	Z
		Y	Y				Y	Y
LDF65007SH	SHIELD	P	P		SHIELD		P	P

PT06A-16-26SW(SR) PTB-16-26PW(SR) PT06A-16-26PW(SR) THRU RACK BULKHEAD

PT06A-16-26SW(SR) PTB-16-26PW(SR) PT06A-16-26PW(SR) THRU INSTRUMENT BULKHEAD

BELDEN 8777 — LDFJ6

LDFMA	RED	LDFMA	RED
LDFMB	BRN	LDFMB	YEL
LDFMC	YEL	LDFMC	BLU
LDFMD	BLK	LDFMD	GRN
	BLU		WHT
	VIO		
	GRN		
	WHT		

DB9S — DB9P — DB9S — DB9P w/shell

DB9MF BULKHEAD

LONG DETECTOR FOCUS ENCODER

BELDEN 8335 — LDFJ8 — BELDEN 8335 — LDFJ9 — BELDEN 8335 — LDFEJ10

LDFE5V	BLU/WHT	1	1		BLU/WHT		1	5V
LDFE0V	WHT/BLU	6	6		WHT/BLU		6	0V
		2	2				2	NC
LDFEA-	ORG/WHT	7	7		ORG/WHT		7	A-
LDFEA+	WHT/ORG	3	3		WHT/ORG		3	A+
LDFEB-	GRN/WHT	8	8		GRN/WHT		8	B-
LDFEB+	WHT/GRN	4	4		WHT/GRN		4	B+
LDFEI-	BRN/WHT	9	9		BRN/WHT		9	I-
LDFEI+	WHT/BRN	5	5		WHT/BRN		5	I+
	GRY/WHT				GRY/WHT			
	WHT/GRY				WHT/GRY			
LDF8335SH	SHIELD				SHIELD			SHIELD

DB9S — DB9P w/shell — DB9S — DB9P w/shell — DB9P — DB9S — DB9P — DB9S w/shell

DB9MF BULKHEAD

NC	1	N.C.
LDFE5V	2	5V
LDFE0V	3	0V
NC	4	N.C.
LDFEA-	5	A-
LDFEA+	6	A+
LDFEB-	7	B-
LDFEB+	8	B+
LDFEI-	9	INDX-
LDFEI+	10	INDX+

INTEGRAL HEDL 5540 ENCODER

12 FEET LONG

Carnegie Institution of Washington

The Observatories
813 Santa Barbara Street
Pasadena, California 91101
PHONE (818) 577-1122 FAX (818) 795-8136

IMACS

Title: Long Detector Focus

Size: C | Scale: | Drawn By: A. BAGISH | Revision:

Date: 8-Sep-2003 14:07:56 | Checked By: | Sheet 46 of 90

File: C:\OCIW\Imacs 16 Aug 03\Motion Control System\IMACS Motion Control July 16 2003.DDB - Documents\IMACS LDF.Sch

TO: CONTROL CHASSIS 4

TERMINATES AT: CONTROL CHASSIS 4
IMACS STRUCTURE INDEXER

TERMINATES AT: CONTROL CHASSIS 4
IMACS STRUCTURE DC POWER

TERMINATES AT: CONTROL CHASSIS 4
IMACS STRUCTURE AC POWER

IMACS STRUCTURE STEPPER DRIVER
MYCOM PSU50

STRCWP +	+	CW
STRCWP-	-	
STRCCWP +	+	CCW
STRCCWP -	-	
STRCO+	+	CO
STRCOFF/	-	
		MONI
		HEAT
		COM
STRMBLU		BLU
STRMRD		RED
STRMWHT		WHT
STRMBRN		BRN
STRMBLK		BLK
STR115ACH		
STR115ACN		AC115V

IMACS STRUCTURE MOTION
IMACS Structure Motion.Sch

STRJ1

STRMBLU	A	BLU	STRMBLU
STRMRD	B	RD	STRMRD
STRMWHT	C	WHT	STRMWHT
STRMBRN	D	ORG	STRMBRN
STRMBLK	E	BLK	STRMBLK
	F		
	G	SHIELD	STR83612SH

BENDIX PT SERIES 1
PT06A-16-8P(SR) PT02A-16-8S

Carnegie Institution of Washington
The Observatories
813 Santa Barbara Street
Pasadena, California 91101
PHONE (818) 577-1122 FAX (818) 795-8136

IMACS

Title: STRUCTURE ROTATOR DRIVER

Size: C	Scale:	Drawn By: A. BAGISH	Revision:
Date: 8-Sep-2003 14:07:57		Checked By:	Sheet 47 of 90

File: C:\OCIW\Imacs 16 Aug 03\Motion Control Systems\IMACS Motion Control July 16 2003.DDB - Documents\IMACS Structure Driver.Sch

TO: IMACS STRUCTURE CONTROL ELECTRONICS

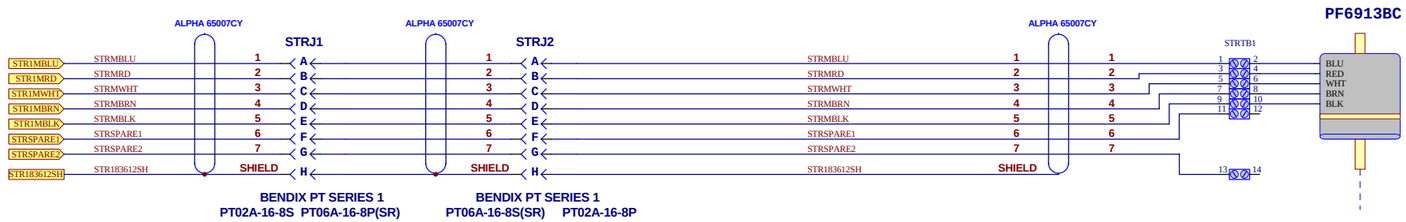

Carnegie Institution of Washington
The Observatories
813 Santa Barbara Street
Pasadena, California 91101
PHONE (818) 577-1122 FAX (818) 795-8136

IMACS

Title: STRUCTURE ROTATOR

Size: C | Scale: | Drawn By: A. BAGISH | Revision:
Date: 8-Sep-2003 14:07:57 | Checked By: | Sheet 48 of 90
File: C:\OCIW\Imacs 16 Aug 03\Motion Control Systems\IMACS Motion Control July 16 2003.DDB - Documents\IMACS Structure Motion.Sch

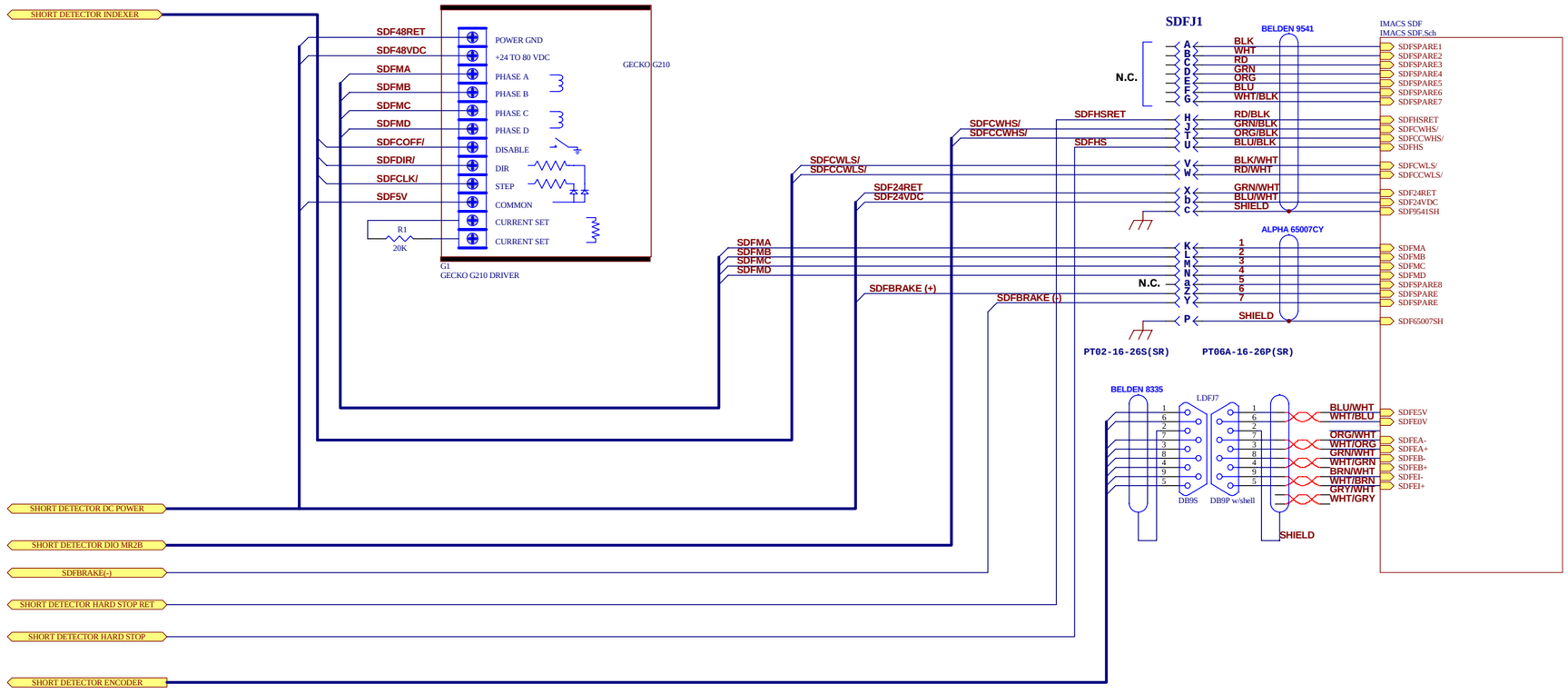

Carnegie Institution of Washington
The Observatories
813 Santa Barbara Street
Pasadena, California 91101
PHONE (818) 577-1122 FAX (818) 795-8136

IMACS

Title: Short Detector Focus Driver

Size: C	Scale:	Drawn By: A. BAGISH	Revision:
Date: 8-Sep-2003 14:07:58		Checked By:	Sheet 49 of 90

File: C:\OCIW\Imacs 16 Aug 03\Motion Control System\IMACS Motion Control July 16 2003.DDB - Documents\IMACS SDF Driver.Sch

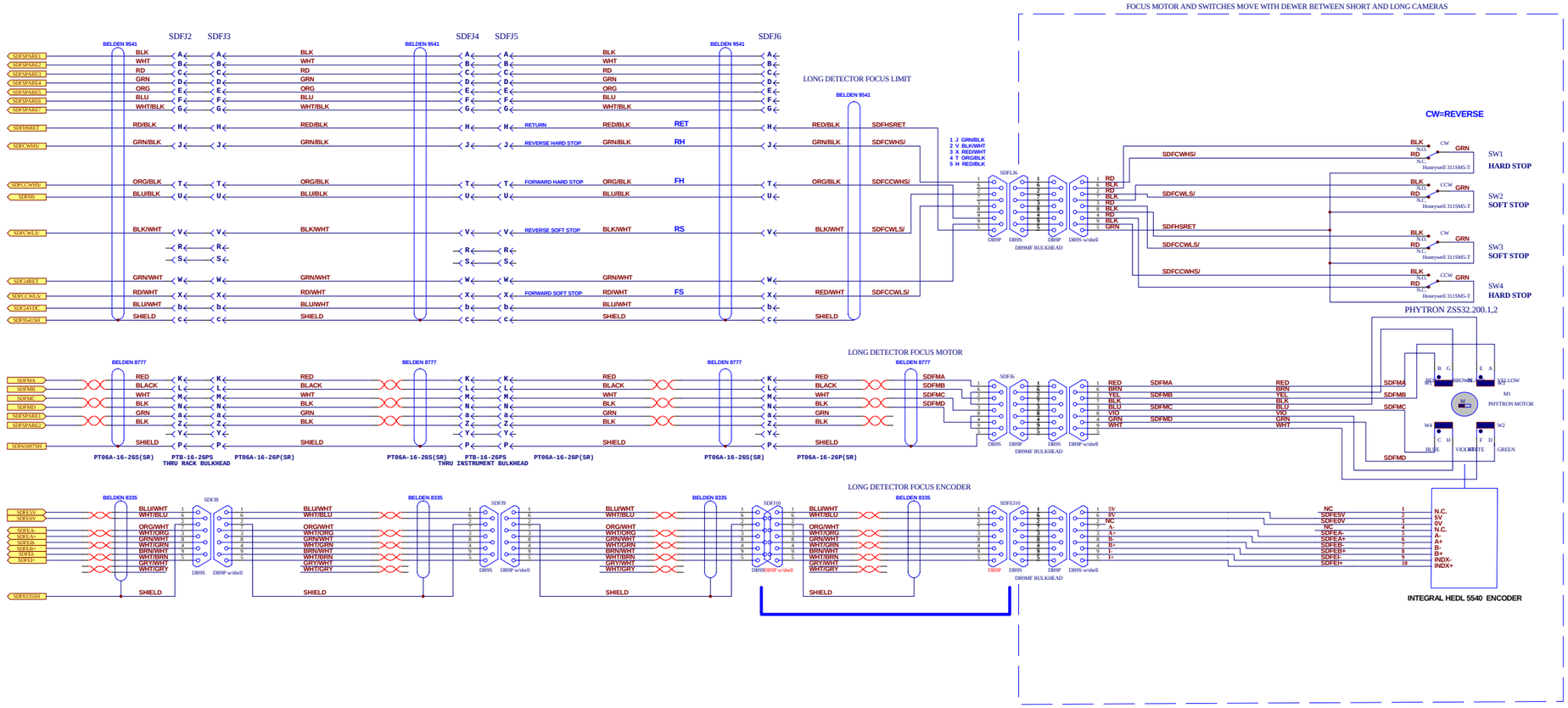

Carnegie Institution of Washington
The Observatories
813 Santa Barbara Street
Pasadena, California 91101
PHONE (818) 577-1122 FAX (818) 795-8136

IMACS

Title: Short Detector Focus

Size: C	Scale:	Drawn By: A. Bagish	Revision:
Date: 8-Sep-2003 14:07:58		Checked By:	Sheet 50 of 90

File: C:\OCIW\Imacs 16 Aug 03\Motion Control System\IMACS Motion Control July 16 2003.DOB - I:\Documents\IMACS SDF.Sch

24V TO TTL

LOGIC INVERSION CURRENT SINK DIGIKEY 767-141-R3.3K-ND NET 14PIN SMD

DIGIKEY 767-143-R15K-ND ISOLATED 14PIN SMD

DIGIKEY 750-83-R1.8K-ND ISOLATED 8 PIN SIP PIN 1 RES 1

NORMALLY LO

FROM ALTERA NORMALLY LO (BRAKE ON)

LIMIT SWITCHES
NORMALLY HI

OPTO22 INPUT SNAP-IDC5

2SD1277

TOP VIEW

TTL TO 24V

24V CURRENT SINK

DIGIKEY 767-143-R3.9K-ND ISOLATED 14PIN SMD

BRAKES CONSUME 170 mA CUURENT WHEN RELEASED
FAILSAFE BRAKE: ON WHEN NOT ENERGIZED
NORMALLY HI (BRAKE ON)

OUTPUT IS IN SERIES WITH OPTO22 SINK MODULE

TO OPTO22 MODULE RACK 3A M8-11.2

TO OPTO22 MODULE RACK 3A M8-11.4

TO OPTO22 MODULE RACK 3A M8-11.6

TO OPTO22 MODULE RACK 3B M16-19.2

SPARE TO J1-71

SPARE TO J1-72

SPARE TO J1-73

SPARE TO J1-74

DIGIKEY 767-141-R3.3K-ND NET 14PIN SMD

FROM INDEXER TO DRIVER

FROM BRAKE TO OPTO 22

TO HARDSTOP LED'S

SPARE ALTERA I/O

SPARE LEVEL SHIFTER 5V TO 24V

SPARE LEVEL SHIFTER 24V TO 5V

PHOENIX80

FRONT PANEL OVER-RIDE SWITCHES

BRAKE

HARD STOP & HARD STOP OVER-RIDE NORMALLY HI (BRAKE CONTROLLED BY COMPUTER)

COMPUTER NORMALLY LO (BRAKE ON)

CHECKSUM = 001DBEFF

ALTERA EPM7128SLC84-7

PROGRAMMING HEADER

PHOENIX 2PIN

Carnegie Institution of Washington
The Observatories
813 Santa Barbara Street
Pasadena, California 91101
PHONE (818) 577-1122 FAX (818) 795-8136

IMACS

Title: IMACS CHASSIS 4 ALTERA LOGIC BOARD

Size: C	Scale:	Drawn By: A. BAGISH	Revision:
Date: 8-Sep-2003 14:33:02		Checked By:	Sheet 51 of 90

File: C:\OCIW\Imacs 16 Aug 03\Motion Control System\IMACS Motion Control July 16 2003.DDB - Documents\Chassis 4 Altera Logic.Sch

BACK

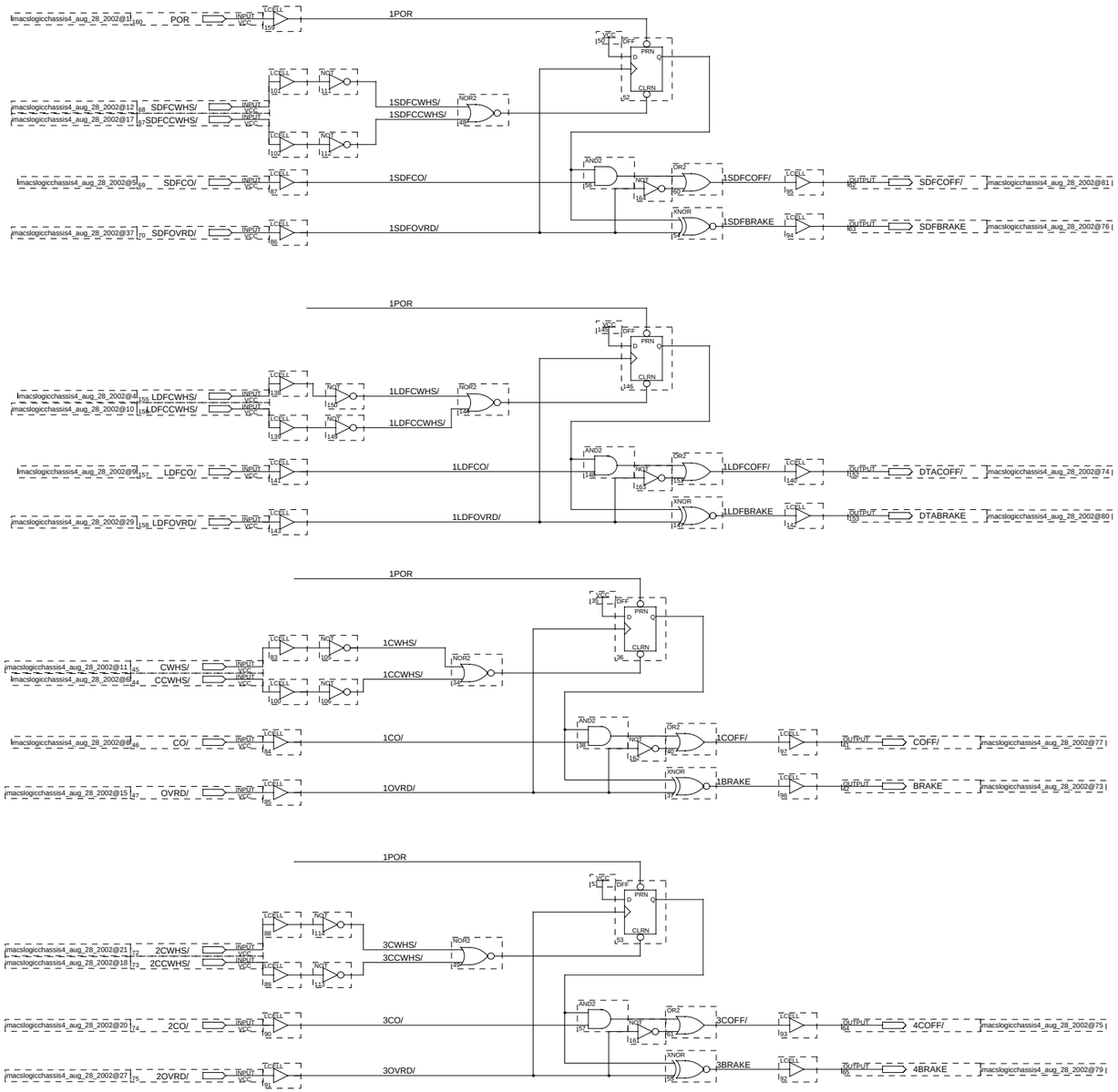

SETS HARD STOPS TO N.C. (GND)
CHECKSUM 001DC0F1

CCD DSP1

LONG CAMERA

CCD DSP2

SHORT CAMERA

CONTROL

LINUX COMPUTER

SERIAL PORT

JACKBABBIT DEVELOPMENT BOARD

Z WORLD
JACKRABBIT BL1810
CONTROLLER

PROTOTYPING AREA

PROGRAM

POWER-ONE 24V-2.4A

CMOS to RS-232 CONVERTER CABLE

DEVELOPMENT COMPUTER

COM

LINMOT MOTOR DRIVER
MODEL E-4000
www.linmot.com

LINMOT
S01-72/600
POWER SUPPLY
72V 8A

SYS 1

SYS 2

OPEN COLLECTER OUTPUTS

LONG CAMERA SHUTTER LINEAR MOTOR

SHORT CAMERA SHUTTER LINEAR MOTOR

IMACS SHUTTER
IMACS Shutter.sch

Shutter Test
IMACS Shutter Test.Sch

Shutter Cabling
Shutter Trigger Cable.Sch

Carnegie Institution of Washington
The Observatories
813 Santa Barbara Street
Pasadena, California 91101
PHONE (818) 577-1122 FAX (818) 795-8136

IMACS

Title: SHUTTER CONTROLLER

Size:	Scale:	Drawn By:	Revision:
C		A. BAGISH	
Date: 8-Sep-2003 14:08:00		Checked By:	Sheet 52 of 90

File: C:\OCIW\Imacs 16 Aug 03\Motion Control Systems\IMACS Motion Control July 16 2003.DDB - Documents\IMACS Shutter Controller.Sch

LONG CAMERA SHUTTER

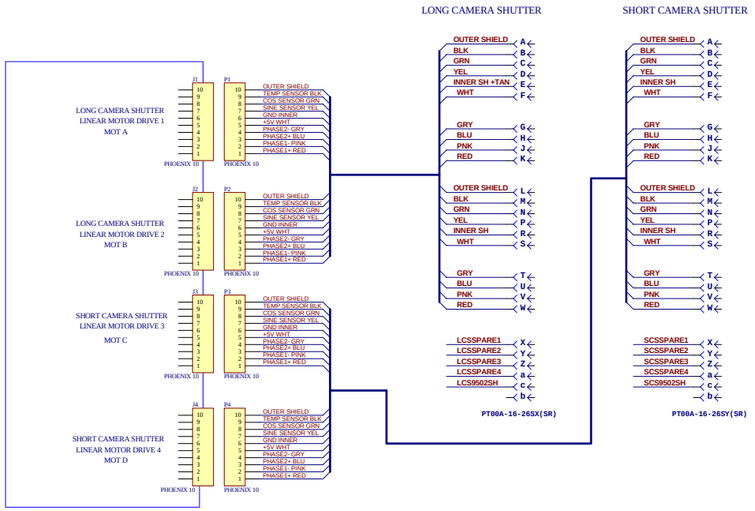

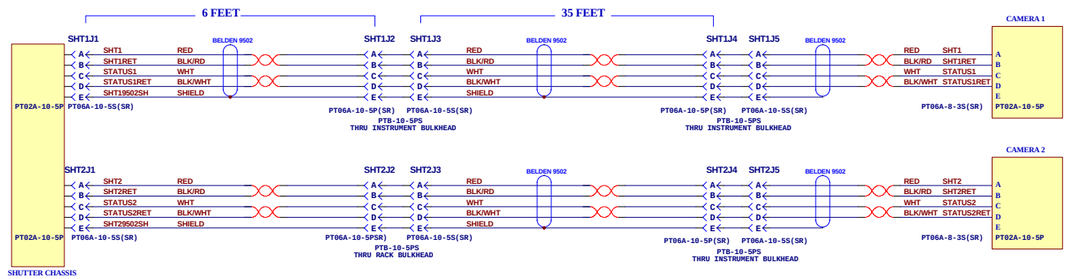

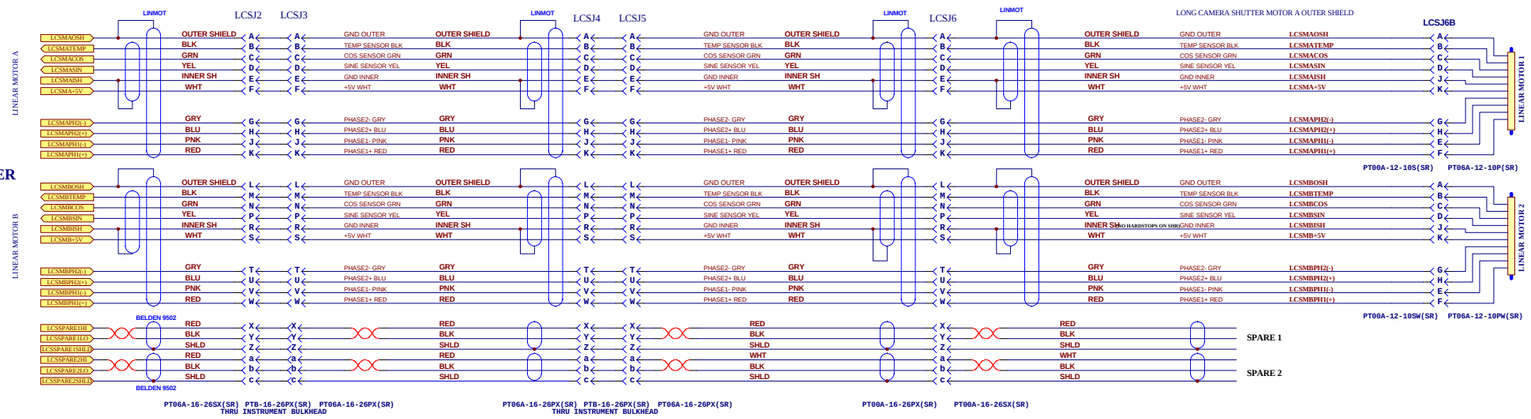

SHORT CAMERA SHUTTER

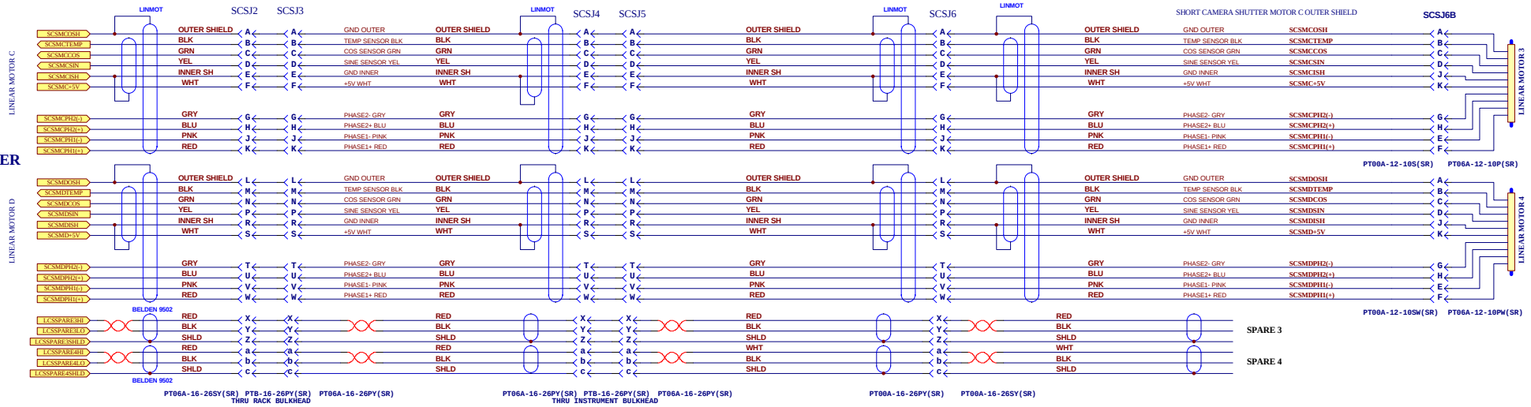

Carnegie Institution of Washington
The Observatories
813 Santa Barbara Street
Pasadena, California 91101
PHONE (818) 577-1122 FAX (818) 795-8136

IMACS

Title: IMACS SHUTTER

Size: C	Scale:	Drawn By: A. Bagish	Revision:
Date: 8-Sep-2003 14:08:01		Checked By:	Sheet 53 of 90

File: C:\OOW\Imacs 16 Aug 03\Motion Control System\IMACS Motion Control July 15 2003.DOB - T:\Documents\IMACS Shutter.Sch

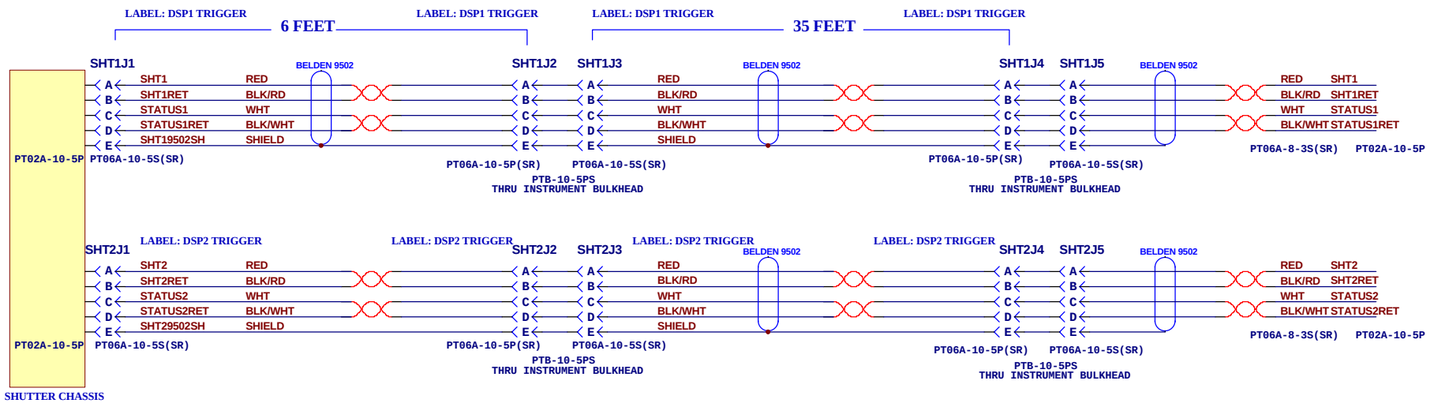

Carnegie Institution of Washington
The Observatories
813 Santa Barbara Street
Pasadena, California 91101
PHONE (818) 577-1122 FAX (818) 795-8136

IMACS

Title: IMACS SHUTTER TRIGGER CABLE

Size: C	Scale:	Drawn By: A. BAGISH	Revision:
Date: 8-Sep-2003 14:08:02		Checked By:	Sheet 54 of 90

File: C:\OCIW\Imacs 16 Aug 03\Motion Control System\IMACS Motion Control July 16 2003.DDB - Documents\Shutter Trigger Cable.Sch

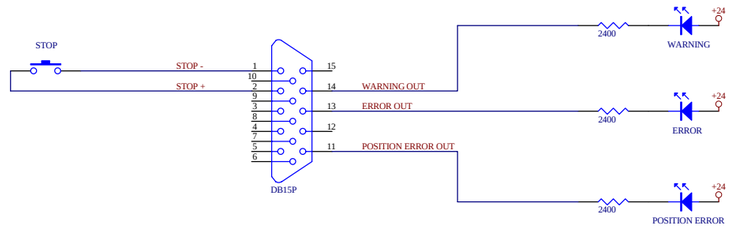

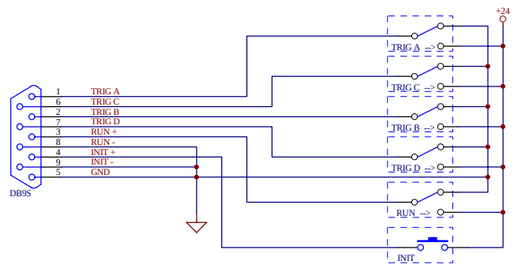

Carnegie Institution of Washington
The Observatories
813 Santa Barbara Street
Pasadena, California 91101
PHONE (818) 577-1122 FAX (818) 795-8136

IMACS

Title: IMACS SHUTTER TEST PANEL

Size: C	Scale:	Drawn By: A. BAGISH	Revision:
Date: 8-Sep-2003 14:08:02		Checked By:	Sheet 55 of 90

File: C:\OCIW\Imacs 16 Aug 03\Motion Control System\IMACS Motion Control July 16 2003.DDB - Documents\IMACS Shutter Test.Sch

4-WIRE TEMPERTURES AND 2-WIRE PRESSURE
IMACS Data Acquisition A Module 100.Sch

4-WIRE TEMPERTURES AND 2-WIRE PRESSURE
IMACS Data Acquisition A Module 200.Sch

4-WIRE TEMPERTURES AND 2-WIRE PRESSURE
IMACS Data Acquisition A Module 300.Sch

OMEGA RTD-NPT-72-E
RTD 1/8" MPT PIPE PLUG PROBES FOR TEMPERATURE MEASUREMENT
OF HEAT EXCHANGER COOLENT IN & OUT
AND GUIDER CAMERA COOLANT IN AND OUT

PLATINUM 100 OHMS ALPHA= 0.00385 OHMS/OHM/DEGREE C

TELESCOPE DIRECT POWER
115 VAC

TTB1
CB1
15A
CARLINGSWITCH
MF1-B-34-615-1-DB7-B-C
MOTION POWER
P115ACH
EARTH
P115ACN

PS
115 VAC
NEUT
GND
SENSE +
SENSE -
P24VDC
P24RET
POWER SUPPLY 24VDC 1.2A

TTB1
P24VDC1
P24VDC2
P24VDC3
P24VDC4
P24VDC5
P24VDC6
P24VDC7
P24RET1
P24RET2
P24RET3
P24RET4
P24RET5
P24RET6
P24RET7

HP 34970A DATA ACQUISTION UNIT A

HP34901A 20 CHANNEL MUX
SLOT 100

OMEGA 1PT100KN1515CLA

HP34901A 20 CHANNEL MUX
SLOT 200

HP34901A 20 CHANNEL MUX
SLOT 300

CH01 RD TEMP1 WHT
CH01 BLK/RD BLK/WHT
CH02 RD TEMP2 WHT
CH02 BLK/RD BLK/WHT
CH03 RD TEMP3 WHT
CH03 BLK/RD BLK/WHT
CH04 RD TEMP4 WHT
CH04 BLK/RD BLK/WHT
CH05 RD TEMP5 WHT
CH05 BLK/RD BLK/WHT
CH06 RD TEMP6 WHT
CH06 BLK/RD BLK/WHT
CH07 RD TEMP7 WHT
CH07 BLK/RD BLK/WHT
CH08 RD TEMP8 WHT
CH08 BLK/RD BLK/WHT
CH09 RD TEMP9 WHT
CH09 BLK/RD BLK/WHT
CH10 RD TEMP10 WHT
CH10 BLK/RD BLK/WHT
CH11 BLK/WHT WHT
CH11 WHT BLK/WHT
CH12 WHT BLK/WHT
CH12 WHT BLK/WHT
CH13 WHT BLK/WHT
CH13 WHT BLK/WHT
CH14 WHT BLK/WHT
CH14 WHT BLK/WHT
CH15 WHT BLK/WHT
CH15 WHT BLK/WHT
CH16 WHT BLK/WHT
CH16 WHT BLK/WHT
CH17 WHT BLK/WHT
CH17 WHT BLK/WHT
CH18 WHT BLK/WHT
CH18 WHT BLK/WHT
CH19 WHT BLK/WHT
CH19 WHT BLK/WHT
CH20 WHT BLK/WHT
CH20 WHT BLK/WHT
CH21 RED CPINLO_BLK
CH21 BLK/RD P24RET
CH22 WHT CPOUTLO_BLK
CH22 BLK/WHT P24RET

CH01 RD TEMP11 WHT
CH01 BLK/RD BLK/WHT
CH02 RD TEMP12 WHT
CH02 BLK/RD BLK/WHT
CH03 RD TEMP13 WHT
CH03 BLK/RD BLK/WHT
CH04 RD TEMP14 WHT
CH04 BLK/RD BLK/WHT
CH05 RD TEMP15 WHT
CH05 BLK/RD BLK/WHT
CH06 RD TEMP16 WHT
CH06 BLK/RD BLK/WHT
CH07 RD TEMP17 WHT
CH07 BLK/RD BLK/WHT
CH08 RD TEMP18 WHT
CH08 BLK/RD BLK/WHT
CH09 RD TEMP19 WHT
CH09 BLK/RD BLK/WHT
CH10 RD TEMP20 WHT
CH10 BLK/RD BLK/WHT
CH11 WHT BLK/WHT
CH11 WHT BLK/WHT
CH12 WHT BLK/WHT
CH12 WHT BLK/WHT
CH13 WHT BLK/WHT
CH13 WHT BLK/WHT
CH14 WHT BLK/WHT
CH14 WHT BLK/WHT
CH15 WHT BLK/WHT
CH15 WHT BLK/WHT
CH16 WHT BLK/WHT
CH16 WHT BLK/WHT
CH17 WHT BLK/WHT
CH17 WHT BLK/WHT
CH18 WHT BLK/WHT
CH18 WHT BLK/WHT
CH19 WHT BLK/WHT
CH19 WHT BLK/WHT
CH20 WHT BLK/WHT
CH20 WHT BLK/WHT
CH21 RED APHI_BLK
CH21 BLK/RD
CH22 WHT SP1HI_BLK
CH22 BLK/WHT

CH01 RD WHT TEMP21
CH01 BLK/RD BLK/WHT
CH02 RD WHT TEMP22
CH02 BLK/RD BLK/WHT
CH03 MC+5 VOLT1
CH03 MC+5RET
CH04 MC+24 VOLT2
CH04 MC+24RET
CH05 LC+24 VOLT3
CH05 LC-24
CH06 LCFC+24 VOLT4
CH06 LCFC-24
CH07 SC+24 VOLT5
CH07 SC-24
CH08 SCFC+24 VOLT6
CH08 SCFC-24
CH09 PRG+24 VOLT7
CH09 PRG-24
CH10 CFG+24 VOLT8
CH10 CFG-24
CH11 WHT
CH11 BLK/WHT
CH12 WHT WHT
CH12 BLK/WHT BLK/WHT
CH13 SHG+24 VOLT9
CH13 SHG-24
CH14 LO5+12 VOLT10
CH14 LO5RET
CH15 LO5+24 VOLT11
CH15 LO5RET
CH16 SPARE1
CH16 SPARE1RET
CH17 SPARE2
CH17 SPARE2RET
CH18 SPARE3
CH18 SPARE3RET
CH19 SPARE4
CH19 SPARE4RET
CH20 SPARE5
CH20 SPARE5RET
CH21
CH22
CURRENT MEASUREMENT

IMACS Motion Control Computer
RS232

MEASUREMENT SPECIALTIES INC. MSP-300-100-P-5-A-1
0-100 PSI 4-20 mA OUT, 10-30 VDC INPUT
1/8 NPT

PRESSURE TO CURRENT MEASUREMENT

COOLENT IN PRESSURE

P24VDC t P24VDC_RED
RED u CPINLO_BLK
BLK/RD P24RET
P24VDC v P24VDC_RED
WHT w CPOUTLO_BLK
BLK/WHT P24RET
CPIN PRESSURE
CPOUT PRESSURE

COOLENTOUT PRESSURE

PRESSURE TO CURRENT MEASUREMENT

AIR PRESSURE

RED
BLK/RD
WHT
BLK/WHT
P24VDC x P24VDC_RED
P24RET y AP- BLK
P24VDC z P24VDC_RED
AA SP1- BLK
AIR PRESSURE
SP1 PRESSURE

SPARE1

Carnegie Institution of Washington
The Observatories
813 Santa Barbara Street
Pasadena, California 91101
PHONE (818) 577-1122 FAX (818) 795-8136

IMACS

Title: IMACS DATA ACQUISITION UNIT A
Size: C | Scale: | Drawn By: A. BAGISH | Revision:
Date: 8-Sep-2003 14:08:04 | Checked By: | Sheet 56 of 90
File: C:\OCIW\Imacs 16 Aug 03\Motion Control System\IMACS Motion Control July 16 2003.DDB - Documents\IMACS Data Acquisition Unit A.S

HP34901A 20 CHANNEL MUX

"TEMP A"

"TEMP A"

RED & WHT, BLK& GRN TIED TOGETHER
A&C B&D OMEGA 1PT100KN1515CLA

BELDEN 9502 — TJ2 / TJ3 — BELDEN 8125 — TJ4 / TJ5 — USB CABLE

CH101HI	CH01HI	RED	A	A	BLU/WHT	A	A	CH01HI	RED	TEMP 1	STRUCTURE 1 (RTD SENSOR ID #12)
CH101LO	CH01LO	BLK/RD	B	B	WHT/BLU	B	B	CH01LO	BLK/RD		
CH111SHI	CH01SHI	WHT	C	C	ORG/WHT	C	C	CH01SHI	WHT		
CH111SLO	CH01SLO	BLK/WHT	D	D	WHT/ORG	D	D	CH01SLO	BLK/WHT		
CH102HI	CH02HI	RED	E	E	GRN/WHT	E	E	CH02HI	RED	TEMP 2	STRUCTURE 2 (RTD SENSOR ID #6)
CH102LO	CH02LO	BLK/RD	F	F	WHT/GRN	F	F	CH02LO	BLK/RD		
CH112SHI	CH02SHI	WHT	G	G	BRN/WHT	G	G	CH02SHI	WHT		
CH112SLO	CH02SLO	BLK/WHT	H	H	WHT/BRN	H	H	CH02SLO	BLK/WHT		
CH103HI	CH03HI	RED	J	J	GRY/WHT	J	J	CH03HI	RED	TEMP 3	STRUCTURE 3 (RTD SENSOR ID #20)
CH103LO	CH03LO	BLK/RD	K	K	WHT/GRY	K	K	CH03LO	BLK/RD		
CH113SHI	CH03SHI	WHT	L	L	BLU/RD	L	L	CH03SHI	WHT		
CH113SLO	CH03SLO	BLK/WHT	M	M	RD/BLU	M	M	CH03SLO	BLK/WHT		
CH104HI	CH04HI	RED	N	N	ORG/RD	N	N	CH04HI	RED	TEMP 4	STRUCTURE 4 (RTD SENSOR ID #19)
CH104LO	CH04LO	BLK/RD	P	P	RD/ORG	P	P	CH04LO	BLK/RD		
CH114SHI	CH04SHI	WHT	R	R	GRN/RD	R	R	CH04SHI	WHT		
CH114SLO	CH04SLO	BLK/WHT	S	S	RD/GRN	S	S	CH04SLO	BLK/WHT		
CH105HI	CH05HI	RED	T	T	BRN/RD	T	T	CH05HI	RED	TEMP 5	STRUCTURE 5 (RTD SENSOR ID #13)
CH105LO	CH05LO	BLK/RD	U	U	RD/BRN	U	U	CH05LO	BLK/RD		
CH115SHI	CH05SHI	WHT	V	V	GRY/RD	V	V	CH05SHI	WHT		
CH115SLO	CH05SLO	BLK/WHT	W	W	RD/GRY	W	W	CH05SLO	BLK/WHT		
CH106HI	CH06HI	RED	X	X	BLU/BLK	X	X	CH06HI	RED	TEMP 6	STRUCTURE 6 (RTD SENSOR ID #11)
CH106LO	CH06LO	BLK/RD	Y	Y	BLK/BLU	Y	Y	CH06LO	BLK/RD		
CH116SHI	CH06SHI	WHT	Z	Z	ORG/BLK	Z	Z	CH06SHI	WHT		
CH116SLO	CH06SLO	BLK/WHT	*a	*a	BLK/ORG	*a	*a	CH06SLO	BLK/WHT		
CH107HI	CH07HI	RED	*b	*b	GRN/BLK	*b	*b	CH07HI	RED	TEMP 7	STRUCTURE 7 (RTD SENSOR ID #8)
CH107LO	CH07LO	BLK/RD	*c	*c	BLK/GRN	*c	*c	CH07LO	BLK/RD		
CH117SHI	CH07SHI	WHT	*d	*d	BRN/BLK	*d	*d	CH07SHI	WHT		
CH117SLO	CH07SLO	BLK/WHT	*e	*e	BLK/BRN	*e	*e	CH07SLO	BLK/WHT		
CH108HI	CH08HI	RED	*f	*f	GRY/BLK	*f	*f	CH08HI	RED	TEMP 8	STRUCTURE 8 (RTD SENSOR ID #10)
CH108LO	CH08LO	BLK/RD	*g	*g	BLK/GRY	*g	*g	CH08LO	BLK/RD		
CH118SHI	CH08SHI	WHT	*h	*h	BLU/YEL	*h	*h	CH08SHI	WHT		
CH118SLO	CH08SLO	BLK/WHT	*i	*i	YEL/BLU	*i	*i	CH08SLO	BLK/WHT		
CH109HI	CH09HI	RED	*j	*j	ORG/YEL	*j	*j	CH09HI	RED	TEMP 9	STRUCTURE 9 (RTD SENSOR ID #7)
CH109LO	CH09LO	BLK/RD	*k	*k	YEL/ORG	*k	*k	CH09LO	BLK/RD		
CH119SHI	CH09SHI	WHT	*m	*m	GRN/YEL	*m	*m	CH09SHI	WHT		
CH119SLO	CH09SLO	BLK/WHT	*n	*n	YEL/GRN	*n	*n	CH09SLO	BLK/WHT		
CH110HI	CH10HI	RED	*p	*p	BRN/YEL	*p	*p	CH10HI	RED	TEMP 10	STRUCTURE 10 (RTD SENSOR ID #16)
CH110LO	CH10LO	BLK/RD	*q	*q	YEL/BRN	*q	*q	CH10LO	BLK/RD		
CH120SHI	CH10SHI	WHT	*r	*r	GRY/YEL	*r	*r	CH10SHI	WHT		
CH120SLO	CH10SLO	BLK/WHT	*s	*s	YEL/GRY	*s	*s	CH10SLO	BLK/WHT		
		RED	*t	*t	BLU/PUR	*t	*t	CH21HI	RED	P24VDC1_RED	+ CPIN - COOLENT IN PRESSURE
		BLK/RD	*u	*u	PUR/BLU	*u	*u	CH21LO	BLK/RD	CPINLO_BLK	
		WHT	*v	*v	ORG/PUR	*v	*v	CH22HI	WHT	P24VDC2_WHT	+ CPOUT - COOLENTOUT PRESSURE
		BLK/WHT	*w	*w	PUR/ORG	*w	*w	CH22LO	BLK/WHT	CPOUTLO_GRN	
		RED	*x	*x	GRN/PUR	*x	*x	CH221HI	RED	P24VDC3_RED	+ AP - AIR PRESSURE
		BLK/RD	*y	*y	PUR/GRN	*y	*y	CH221LO	BLK/RD	AP- BLK	
		WHT	*z	*z	BRN/PUR	*z	*z	CH222HI	WHT	P24VDC4_RED	+ SP1 - SPARE1
		BLK/WHT	AA	AA	PUR/BRN	AA	AA	CH222LO	BLK/WHT	PSPARE- BLK	
			BB	BB	GRY/PUR	BB	BB				
			CC	CC	PUR/GRY	CC	CC				
TA9502SH	TA9502SH	SHIELD	HH	HH	SHIELD	HH	HH	T18335SH			
			DD	DD		DD	DD				
			EE	EE		EE	EE				
			FF	FF		FF	FF				
			GG	GG		GG	GG				

MODULE 100

RS422 COM
AND PRESSURE TRANSDUCER CHASSIS

PRESSURE TRANSDUCER
EXCITATION VOLTAGE

SPAREHI

P24VDC
P24RET

TJ1 — TP1

CPIHI
CPOHI
APHI

DB9S w/shell — DB9P w/shell

MEASUREMENT CURRENT

CH121H	CPILO	RED
CH121L	P24VRET	BLK/RD
CH122H	CPOLO	WHT
CH121L	P24VRET	BLK/WHT

MEASUREMENT CURRENT

CH221H	APLO	RED
CH221L	P24VRET	BLK/RD
CH222H	SPARELO	WHT
CH222L	P24VRET	BLK/WHT

MODULE 200

TO PAGE 57

PT06A-22-55SX(SR) PTB-22-55PSX PT06A-22-55PX(SR)
THRU RACK BULKHEAD

PT06A-22-55SX(SR) PTB-22-55PSX PT06A-22-55PX(SR)
THRU INSTRUMENT BULKHEAD

Carnegie Institution of Washington
The Observatories
813 Santa Barbara Street
Pasadena, California 91101
PHONE (818) 577-1122 FAX (818) 795-8136

IMACS

Title: IMACS TEMP SENSORS A MODULE 100

Size:	Scale:	Drawn By:	Revision:
C		A. BAGISH	
Date: 8-Sep-2003 14:08:05		Checked By:	Sheet 57 of 90

File: C:\OCIW\Imacs 16 Aug 03\Motion Control System\IMACS Motion Control July 16 2003.DDB - Documents\IMACS Data Acquisition A Modul

HP34901A 20 CHANNEL MUX

"TEMP B" "TEMP B"

MODULE 200

			BELDEN 9502	T2J2	T2J3		BELDEN 8125	T2J4	T2J5		BELDEN 9502			
CH201HI	CH11HI	RED		A	A	BLU/WHT		A	A	RTD11HI		RED		
CH201LO	CH11LO	BLK/RD		B	B	WHT/BLU		B	B	RTD11LO		BLK/RD		
CH211SHI	CH11SHI	WHT		C	C	ORG/WHT		C	C	RTD11SHI		WHT	TEMP 11	STRUCTURE 11
CH211SLO	CH11SLO	BLK/WHT		D	D	WHT/ORG		D	D	RTD11SLO		BLK/WHT		
CH202HI	CH12HI	RED		E	E	GRN/WHT		E	E	RTD12HI		RED		
CH202LO	CH12LO	BLK/RD		F	F	WHT/GRN		F	F	RTD12LO		BLK/RD		
CH212SHI	CH12SHI	WHT		G	G	BRN/WHT		G	G	RTD12SHI		WHT	TEMP 12	STRUCTURE 12
CH212SLO	CH12SLO	BLK/WHT		H	H	WHT/BRN		H	H	RTD12SLO		BLK/WHT		
CH203HI	CH13HI	RED		J	J	GRY/WHT		J	J	RTD13HI		RED		
CH203LO	CH13LO	BLK/RD		K	K	WHT/GRY		K	K	RTD13LO		BLK/RD		
CH213SHI	CH13SHI	WHT		L	L	BLU/RD		L	L	RTD13SHI		WHT	TEMP 13	COLLIMATOR 1
CH213SLO	CH13SLO	BLK/WHT		M	M	RD/BLU		M	M	RTD13SLO		BLK/WHT		
CH204HI	CH14HI	RED		N	N	ORG/RD		N	N	RTD14HI		RED		
CH204LO	CH14LO	BLK/RD		P	P	RD/ORG		P	P	RTD14LO		BLK/RD		
CH214SHI	CH14SHI	WHT		R	R	GRN/RD		R	R	RTD14SHI		WHT	TEMP 14	COLLIMATOR 2
CH214SLO	CH14SLO	BLK/WHT		S	S	RD/GRN		S	S	RTD14SLO		BLK/WHT		
CH205HI	CH15HI	RED		T	T	BRN/RD		T	T	RTD15HI		RED		
CH205LO	CH15LO	BLK/RD		U	U	RD/BRN		U	U	RTD15LO		BLK/RD		
CH215SHI	CH15SHI	WHT		V	V	GRY/RD		V	V	RTD15SHI		WHT	TEMP 15	LONG CAMERA 1
CH215SLO	CH15SLO	BLK/WHT		W	W	RD/GRY		W	W	RTD15SLO		BLK/WHT		
CH206HI	CH16HI	RED		X	X	BLU/BLK		X	X	RTD16HI		RED		
CH206LO	CH16LO	BLK/RD		Y	Y	BLK/BLU		Y	Y	RTD16LO		BLK/RD		
CH216SHI	CH16SHI	WHT		Z	Z	ORG/BLK		Z	Z	RTD16SHI		WHT	TEMP 16	LONG CAMERA 2
CH216SLO	CH16SLO	BLK/WHT		*a	*a	BLK/ORG		*a	*a	RTD16SLO		BLK/WHT		
CH207HI	CH17HI	RED		*b	*b	GRN/BLK		*b	*b	RTD17HI		RED		
CH207LO	CH17LO	BLK/RD		*c	*c	BLK/GRN		*c	*c	RTD17LO		BLK/RD		
CH217SHI	CH17SHI	WHT		*d	*d	BRN/BLK		*d	*d	RTD17SHI		WHT	TEMP 17	SHORT CAMERA 1
CH217SLO	CH17SLO	BLK/WHT		*e	*e	BLK/BRN		*e	*e	RTD17SLO		BLK/WHT		
CH208HI	CH18HI	RED		*f	*f	GRY/BLK		*f	*f	RTD18HI		RED		
CH208LO	CH18LO	BLK/RD		*g	*g	BLK/GRY		*g	*g	RTD18LO		BLK/RD		
CH218SHI	CH18SHI	WHT		*h	*h	BLU/YEL		*h	*h	RTD18SHI		WHT	TEMP 18	SHORT CAMERA 2
CH218SLO	CH18SLO	BLK/WHT		*i	*i	YEL/BLU		*i	*i	RTD18SLO		BLK/WHT		
CH209HI	CH19HI	RED		*x	*x	GRN/PUR		*x	*x	RTD19HI		RED		EI1201109/RTD-NPT-72-E
CH209LO	CH19LO	BLK/RD		*y	*y	PUR/GRN		*y	*y	RTD19LO		BLK/RD		
CH219HI	CH19SHI	WHT		*z	*z	BRN/PUR		*z	*z	RTD19SHI		WHT	TEMP 19	COOLENT IN
CH219LO	CH19SLO	BLK/WHT		AA	AA	PUR/BRN		AA	AA	RTD19SLO		BLK/WHT		
CH210HI	CH20HI	RED		*j	*j	ORG/YEL		*j	*j	RTD20HI		RED		EI1201109/RTD-NPT-72-E
CH210LO	CH20LO	BLK/RD		*k	*k	YEL/ORG		*k	*k	RTD20LO		BLK/RD		
CH220SHI	CH20SHI	WHT		*m	*m	GRN/YEL		*m	*m	RTD20SHI		WHT	TEMP 20	COOLENT OUT
CH220SLO	CH20SLO	BLK/WHT		*n	*n	YEL/GRN		*n	*n	RTD20SLO		BLK/WHT		
CH221HI	CH221HI	RED		*p	*p	BRN/YEL		*p	*p	RTD21HI		RED		
CH221LO	CH221LO	BLK/RD		*q	*q	YEL/BRN		*q	*q	RTD21LO		BLK/RD		
CH222HI	CH222HI	WHT		*r	*r	GRY/YEL		*r	*r	RTD21SHI		WHT	TEMP 21	INTERNAL
CH222LO	CH222LO	BLK/WHT		*s	*s	YEL/GRY		*s	*s	RTD21SLO		BLK/WHT		
				*t	*t	BLU/PUR		*t	*t	*t		RED		
				*u	*u	PUR/BLU		*u	*u	*u		BLK/RD		
				*v	*v	ORG/PUR		*v	*v	*v		WHT	SPARE	
				*w	*w	PUR/ORG		*w	*w	*w		BLK/WHT		
				BB	BB	GRY/PUR		BB	BB	BB		RED		
				CC	CC	PUR/GRY		CC	CC	CC		BLK/RD		
				DD	DD			DD	DD	DD		WHT	SPARE	
				EE	EE			EE	EE	EE		BLK/WHT		
TB9502SH				HH	HH	SHIELD		HH	HH					
				FF	FF			FF	FF					
				GG	GG			GG	GG					

CURRENT MEASUREMENT

FROM TEMP A CONNECTOR

TO MODULE 300

PT06A-22-55SY(SR) PTB-22-55PSY PT06A-22-55PY(SR)
THRU RACK BULKHEAD

PT06A-22-55SY(SR) PTB-22-55PSY PT06A-22-55PY(SR)
THRU INSTRUMENT BULKHEAD

Carnegie Institution of Washington
The Observatories
813 Santa Barbara Street
Pasadena, California 91101
PHONE (818) 577-1122 FAX (818) 795-8136

IMACS

Title: IMACS DATA ACQUISITION A MODULE 200

Size: C	Scale:	Drawn By: A. BAGISH	Revision:
Date: 8-Sep-2003 14:08:06		Checked By:	Sheet 58 of 90

File: C:\OCIW\Imacs 16 Aug 03\Motion Control Systems\IMACS Motion Control July 16 2003.DDB - Documents\IMACS Data Acquisition A Modul

HP 34970A DATA ACQUISITION UNIT A MODULE 300

HP34901A 20 CHANNEL MUX

BELDEN 9502

CH301HI	CH301HI	RED	TEMP21HI	RED	RED		
CH301LO	CH301LO	BLK/RD	TEMP21LO	BLK/RD	BLK/RD		
CH311SHI	CH311SHI	WHT	TEMP21SHI	WHT	WHT		
CH311SLO	CH311SLO	BLK/WHT	TEMP21SLO	BLK/WHT	BLK/WHT		
CH302HI	CH302HI	RED	TEMP22HI	RED	RED		
CH302LO	CH302LO	BLK/RD	TEMP22LO	BLK/RD	BLK/RD		
CH312SHI	CH312SHI	WHT	TEMP22SHI	WHT	WHT		
CH312SLO	CH312SLO	BLK/WHT	TEMP22SLO	BLK/WHT	BLK/WHT		
CH303HI	CH303HI		VOLT1HI		BLU	MC+5	VOLT1
CH303LO	CH303LO		VOLT1LO		BRN	MC+5RET	
CH304HI	CH304HI		VOLT2HI		ORG	MC+24	VOLT2
CH304LO	CH304LO		VOLT2LO		GRN	MC+24RET	
CH305HI	CH305HI		VOLT3HI		GRN	LC+24	VOLT3
CH305LO	CH305LO		VOLT3LO		YEL	LC-24	
CH306HI	CH306HI		VOLT4HI		BLU	LCFC+24	VOLT4
CH306LO	CH306LO		VOLT4LO		BRN	LCFC-24	
CH307HI	CH307HI		VOLT5HI		GRN	SC+24	VOLT5
CH307LO	CH307LO		VOLT5LO		YEL	SC-24	
CH308HI	CH308HI		VOLT6HI		BLU	SCFC+24	VOLT6
CH308LO	CH308LO		VOLT6LO		BRN	SCFC-24	
CH309HI	CH309HI		VOLT7HI		BLU	PRG+24	VOLT7
CH309LO	CH309LO		VOLT7LO		BRN	PRG-24	
CH310HI	CH310HI		VOLT8HI		GRN	CFG+24	VOLT8
CH310LO	CH310LO		VOLT8LO		YEL	CFG-24	
CH313HI	CH313HI		VOLT9HI		PUR	SHG+24	VOLT9
CH313LO	CH313LO		VOLT9LO		RED	SHG-24	
CH314HI	CH314HI		VOLT10HI		BLU	RS422+24	VOLT10
CH314LO	CH314LO		VOLT10LO		BRN	RS422GND	
CH315HI	CH315HI		VOLT11HI		ORG	RS422+12	VOLT11
CH315LO	CH315LO		VOLT11LO		BLK	RS422GND	
CH316HI	CH316HI		VOLT11HI			PC5V	VOLT12
CH316LO	CH316LO		VOLT11LO			PC5VGND	
CH317HI	CH317HI		VOLT11HI			AC117	VOLT13
CH317LO	CH317LO		VOLT11LO			AC117RET	
CH318HI	CH318HI		VOLT11HI			L0512V	VOLT14
CH318LO	CH318LO		VOLT11LO			L05RET	
CH319HI	CH319HI						
CH319LO	CH319LO						
CH320HI	CH320HI						
CH320LO	CH320LO						
CH321HI	CH321HI						
CH321LO	CH321LO						
CH322HI	CH322HI						
CH322LO	CH322LO						
TC9502SH	TC9502SH						

TEMP B JACK TEMP 21 FROM INSTRUMENT

TEMP 22 MCS RACK

MODULE 300

CURRENT MEASUREMENT

MCS RACK

VOLT1 RACK

VOLT2

VOLT3 LONG CAMERA DETECTOR

VOLT4 LONG CAMERA FLEXURE CCD

VOLT5 SHORT CAMERA DETECTOR

VOLT6 SHORT CAMERA FLEXURE CCD

VOLT7 PRINCIPAL GUIDER

VOLT8 CENTER FIELD GUIDER

VOLT9 SHACK HARTMANN GUIDER

VOLT10 RS422 Converter / Current Excitation Chassis

VOLT11 RS422 Converter / Current Excitation Chassis

VOLT12 PC 5V

VOLT13 AC 177VAC

VOLT14 L05 12VDC

Carnegie Institution of Washington
The Observatories
813 Santa Barbara Street
Pasadena, California 91101
PHONE (818) 577-1122 FAX (818) 795-8136

IMACS

Title: IMACS TEMP/VOLT SENSORS MODULE 300

Size: C	Scale:	Drawn By: A. BAGISH	Revision:
Date: 8-Sep-2003 14:08:07		Checked By:	Sheet 59 of 90

File: C:\OCIW\Imacs 16 Aug 03\Motion Control Systems\IMACS Motion Control July 16 2003.DDB - Documents\IMACS Data Acquisition A Modul

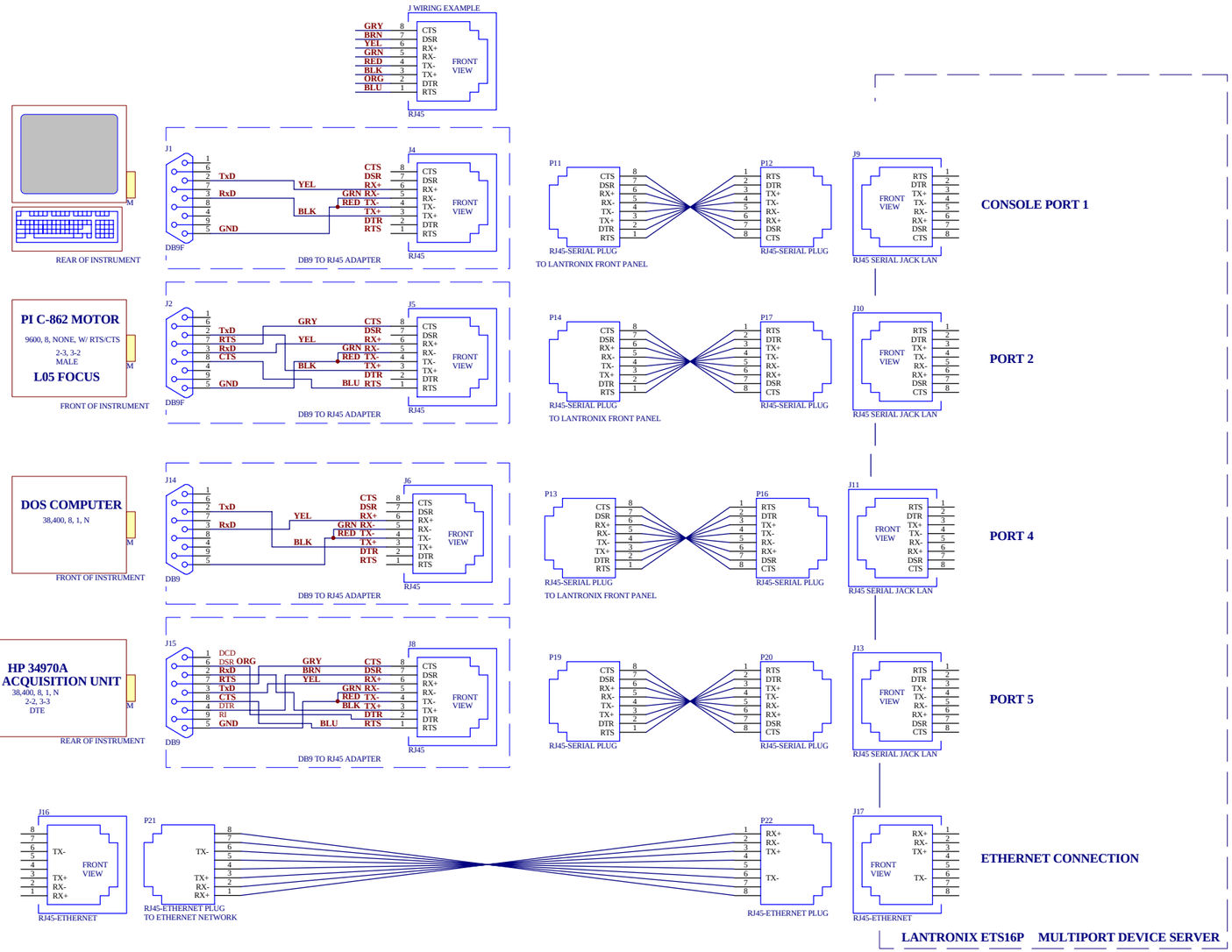

Serial Communications
RS-422 & Pressure Xducer Xcitation Chassis.Sch

Serial Communications
Serial Ports Simplified.Sch

Serial Communications
CCD Vacuum Gauges.Sch

Carnegie Institution of Washington
The Observatories
813 Santa Barbara Street
Pasadena, California 91101
PHONE (818) 577-1122 FAX (818) 795-8136

IMACS

Title: IMACS MCS SERIAL PORTS

Size: C	Scale:	Drawn By: A. BAGISH	Revision:
Date: 8-Sep-2003 14:08:02		Checked By:	Sheet 60 of 90

File: C:\OCIW\Imacs 16 Aug 03\Motion Control System\IMACS Motion Control July 16 2003.DDB - Documents\Serial Ports.Sch

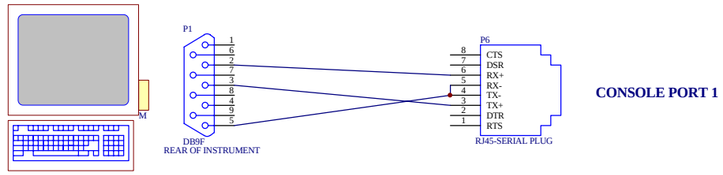

CONSOLE PORT 1

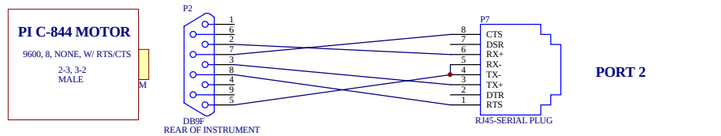

PORT 2

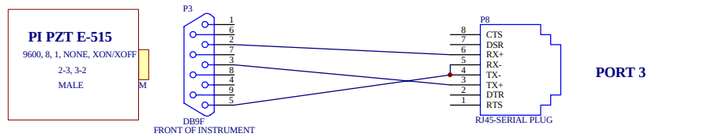

PORT 3

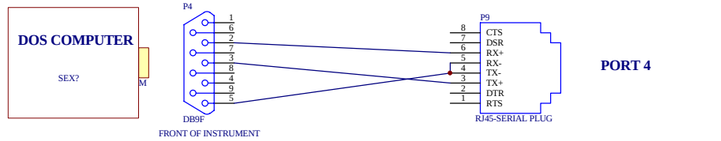

PORT 4

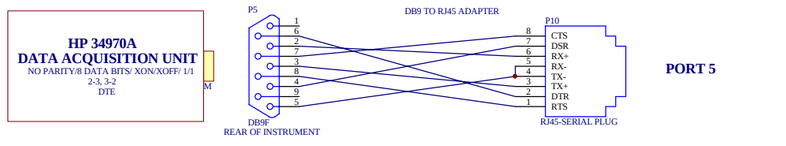

PORT 5

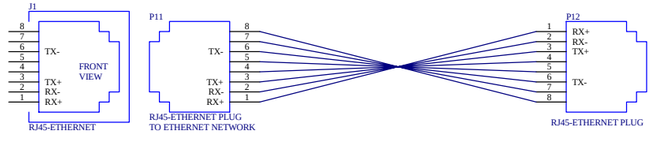

ETHERNET CONNECTION

Carnegie Institution of Washington
The Observatories
813 Santa Barbara Street
Pasadena, California 91101
PHONE (818) 577-1122 FAX (818) 795-8136

IMACS

Title: IMACS MCS Serial Ports Simplified

Size: C	Scale:	Drawn By: A. BAGISH	Revision:
Date: 8-Sep-2003 14:08:03		Checked By:	Sheet 61 of 90

File: C:/OCIW/Imacs 16 Aug 03/Motion Control Systems/IMACS Motion Control July 16 2003.DDB - Documents/Serial Ports Simplified.Sch

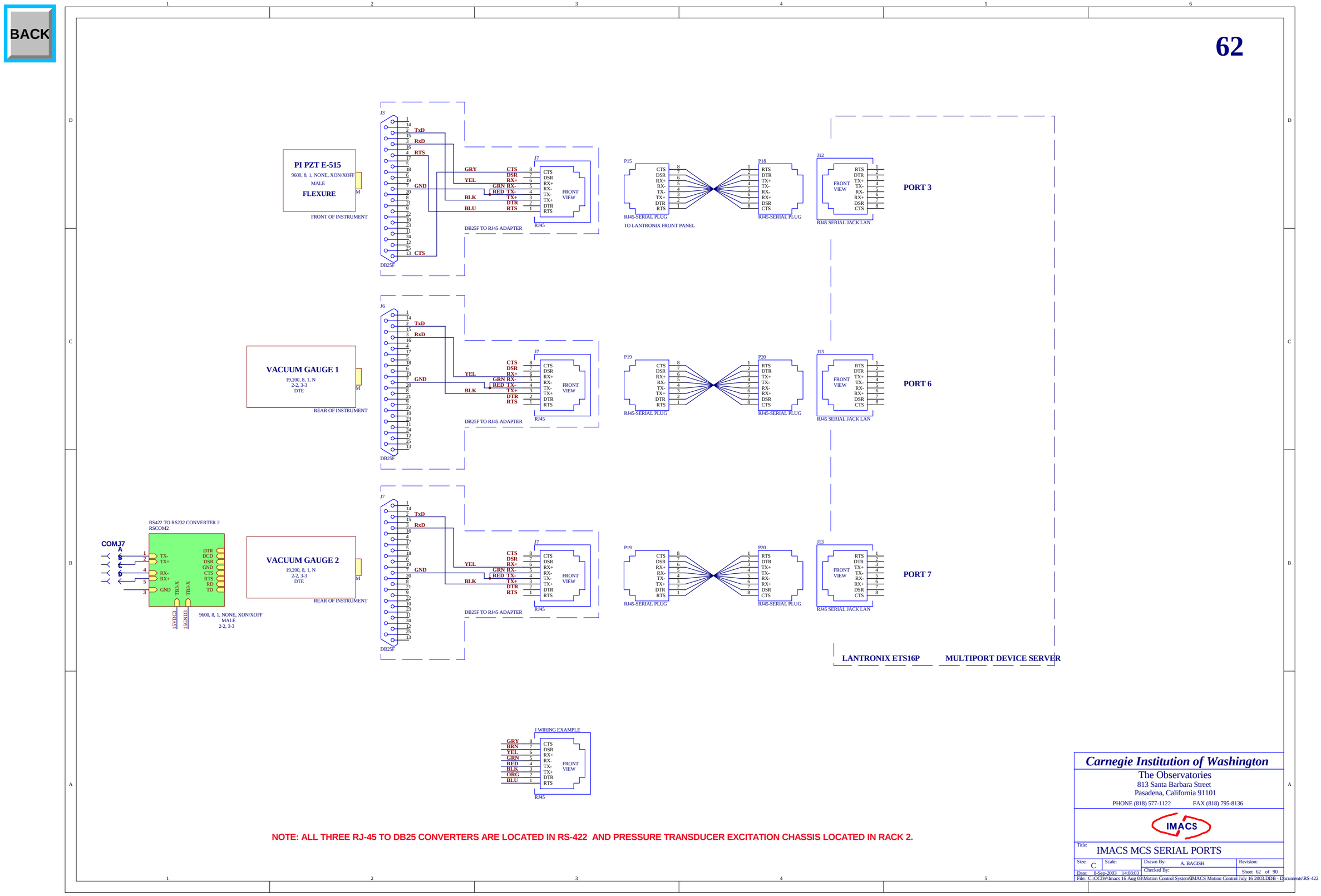

Carnegie Institution of Washington
The Observatories
813 Santa Barbara Street
Pasadena, California 91101
PHONE (818) 577-1122 FAX (818) 795-8136

IMACS

Title: IMACS MCS SERIAL PORTS

Size: C	Scale:	Drawn By: A. BAGISH	Revision:
Date: 8-Sep-2003 14:08:03		Checked By:	Sheet 62 of 90

File: C:\OCIW-Imacs 16 Aug 03\Motion Control Systems\IMACS Motion Control July 16 2003.DDB - Documents\RS-422 & Pressure Xducer Xcitat

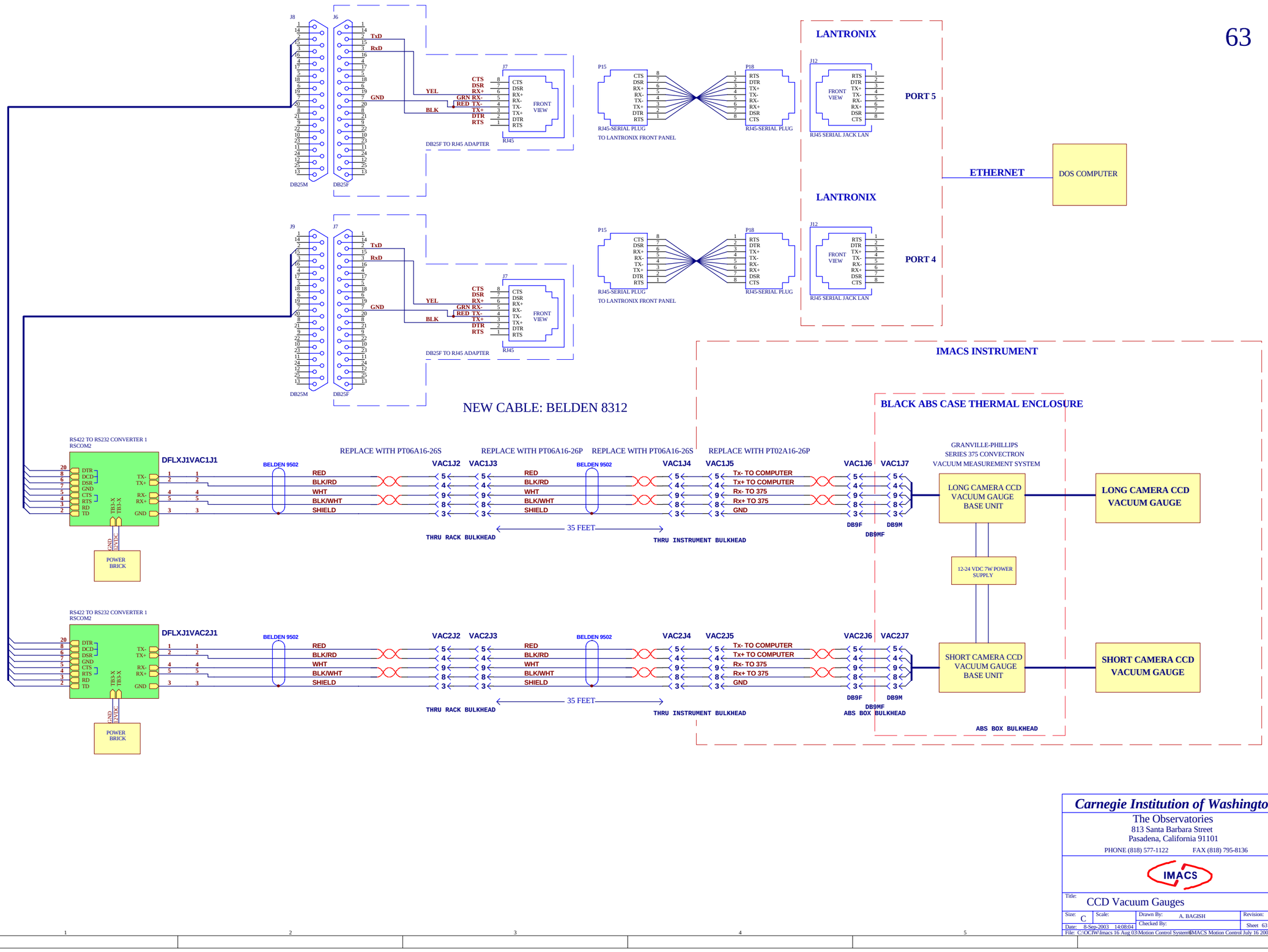

Carnegie Institution of Washington
The Observatories
813 Santa Barbara Street
Pasadena, California 91101
PHONE (818) 577-1122 FAX (818) 795-8136

IMACS

Title: CCD Vacuum Gauges

Size: C	Scale:	Drawn By: A. BAGISH	Revision:
Date: 8-Sep-2003 14:08:04		Checked By:	Sheet 63 of 90

File: C:\OCIW\Imacs 16 Aug 03\Motion Control System\IMACS Motion Control July 16 2003.DDB - Documents\CCD Vacuum Gauges.Sch

BACK

IMACS INSTRUMENT

LJ2 LJ3 LJ4 LJ5 LJ6

ALPHA 65007CY

LAMP1 LAMP2 LAMP3 LAMP4 LAMP5 LAMP6 L115ACN SHIELD F115ACH F115ACN

BLK RED

BELDEN 88760

PT06A-12-10SW(SR) PTB-12-10PSW PT06A-12-10PW(SR)
THRU INSTRUMENT BULKHEAD

PT06A-12-10SW(SR) PTB-12-10PSW PT06A-12-10PW(SR)
THRU INSTRUMENT BULKHEAD

PT06A-12-10SW(SR) PT00A-12-10PW(SR)

SEE MIC CABLE LAYOUT.SCH

MIC

PT06A-16-26SX(SR) PT00A-16-26PX(SR)

LTB1 SHIELD1 SHIELD2 SHIELD3 SHIELD4

LTB2 L115ACN1 L115ACN2 L115ACN3 L115ACN4 L115ACN5 L115ACN6 L115ACN7 L115ACN8

+/- 15VDC PWR SUPPLY

LTB3 +15VDC1 +15VDC2 +15VDC3 +15VDC4 +15VDC5 15GND1 15GND2 15GND3 15GND4 15GND5 -15VDC1 -15VDC2 -15VDC3 -15VDC4 -15VDC5

AUDIO OUT

AUDIO PREAMP 1
CONDENSOR MICROPHONE

AUDIO PREAMP 2
CONDENSOR MICROPHONE

MIC1 MIC2 MIC3

WHT BLK SHEILD MIC1 HI MIC1 LO MIC18413SH MIC2 HI MIC2 LO MIC28413SH MIC3 HI MIC3 LO MIC38413SH

LAMP1 TRANSFORMER — Ne LAMP Oriel 6035
LAMP2 TRANSFORMER — Ne(Hg) LAMP Oriel 6034
LAMP3 TRANSFORMER — Argon LAMP Oriel 6030
LAMP4 TRANSFORMER — Krypton LAMP Oriel 6031
LAMP5 TRANSFORMER — Xenon LAMP Oriel 6033
HALOGEN LAMP

SHIELD L115ACN1

PT00A-12-10SW(SR) PT06A-12-10PW(SR) PT06A-12-10SW(SR) PT00A-12-10PW(SR)

COM J2 COM J3 COM J4 COM J5 COM J6 COM J7

BELDEN 8312

19,200 N 8 1S
MODEL 365
+R BLK
-R RED
+T BLK
-T WHT

BLK RED BLK WHT

RS422 TO RS232 CONVERTER 2
RSCOM2

TX- TX+ RX- RX- GND TBD.X TBD.X DTR DCD DSR GND CTS RTS RD TD

WHT RED

C D A B

DTE

J2DCE J2XDTE

19200, 8, 1, NONE
MALE
2-2, 3-3

POWER BRICK

CCD FLEXURE MOTION STAGE CONTROLLER
PI PZT E-515

PI CONTROLLER
Model C-844.40
Precision Motor Controller

DFLX3B

DETECTOR X-Y MOTION

F115ACH2 F115ACN2 SHIELD3

BLK GRN BLK BLU — Tx- TO COMPUTER, Tx+ TO COMPUTER, Rx- TO 375, Rx+ TO 375

BLK YEL BLK BRN — Tx- TO COMPUTER, Tx+ TO COMPUTER, Rx- TO 375, Rx+ TO 375

GND RX+ TX+ RX- TX- — DB9-F / DB9-M

GRANVILLE-PHILLIPS
SERIES 375 CONVECTRON
VACUUM MEASUREMENT SYSTEM

LONG CAMERA CCD VACUUM GAUGE BASE UNIT

allow for these connectors to pass through

LONG CAMERA CCD VACUUM GAUGE

SHORT CAMERA CCD VACUUM GAUGE BASE UNIT

allow for these connectors to pass through

SHORT CAMERA CCD VACUUM GAUGE

J1XDCE J1XDTE

RS-422 Communications
RS-422 Communications.Sch

BLK ORG RED WHT — RED GRN RED BLU — RED YEL RED BRN — GRY SHIELD

PTB-16-26P(SR)
PT06A-16-26S(SR) PT06A-16-26P(SR)
THRU RACK BULKHEAD

PTB-16-26P(SR)
PT06A-16-26S(SR) PT06A-16-26P(SR)
THRU INSTRUMENT BULKHEAD

PT06A-16-26S(SR) PT00A-16-26P(SR)
ABS BOX BULKHEAD

"RS-422 COM"
35 FEET

LTB2 F115ACH1 F115ACH2 F115ACH3 F115ACH4

LTB2 F115ACN1 F115ACN2 F115ACN3 F115ACN4

SHIELD4

HEAT EXCHANGER
LYTRON Model C-844.40

F1 F2

COOLANT IN COOLANT OUT

AIR CIRCULATION FAN
ROTRON PT2283

FANJ6

V1 VRET3 V1 VRET1

PT00A-12-3S(SR) PT06A-12-3P(SR)

F3 AIR PRESSURIZATION FAN
HOFFMAN SF-09 FILTER/FAN

F4 AIR CIRCULATION FAN

F5 AIR CIRCULATION FAN

F115ACH1 F115ACN1 SHIELD5

VARIAC1 2.5A VARIAC2 2.5A VARIAC3 2.5A

V1 VRET1 V2 VRET2 V3 VRET3

TO PRESSURIZATION FANS

TO VENTILATION FANS

PT00A-10-6S(SR) PT06A-10-6P(SR)

BLACK ABS CASE THERMAL ENCLOSURE

IMACS INSTRUMENT

Carnegie Institution of Washington
The Observatories
813 Santa Barbara Street
Pasadena, California 91101
PHONE (818) 577-1122 FAX (818) 795-8136

IMACS

Title: IMACS BLACK ABS RACK

Size:	Scale:	Drawn By: A. Bagish	Revision:
C		Checked By:	
Date: 8-Sep-2003 14:29:49			Sheet 64 of 90

File: C:\OCP\Imacs Hr Aug 03\Motion Control System\IMACS Motion Control July 16 2003.DSR Documents\IMACS Black ABS Rack.Sch

COMPUTER CONTROL

ETHERNET

LANTRONIX

PORT 3

PORT 6

PORT 7

J12 — RJ45 SERIAL JACK LAN (FRONT VIEW): 8 CTS, 7 DSR, 6 RX+, 5 RX-, 4 TX-, 3 TX+, 2 DTR, 1 RTS

P18 — RJ45-SERIAL PLUG: CTS, DSR, RX+, RX-, TX-, TX+, DTR, RTS

TO LANTRONIX FRONT PANEL

P15 — RJ45-SERIAL PLUG: 1 RTS, 2 DTR, 3 TX+, 4 TX-, 5 RX-, 6 RX+, 7 DSR, 8 CTS

J7 — RJ45 (FRONT VIEW)

DB9 TO RJ45 ADAPTER

19,200 N 8 1

RJ45	DB9	
RTS	1	RTS
DTR	2	DTR
TX+	3	TX+
TX-	4	TX-
RX-	5	RX- RED
RX+	6	RX+ GRN
DSR	7	DSR
CTS	8	CTS

BLK, YEL; GND, RxD, TxD

RS-422 COMJ11 — DB25S DB25P

RS232 TO RS422 CONVERTER 1 RSCOM2

RS232 TO RS422 CONVERTER 2 RSCOM2

RS232 TO RS422 CONVERTER 3 RSCOM2

DB25P: 20 DTR, 8 DCD, 6 DSR, 7 GND, 5 CTS, 4 RTS, 3 RD, 2 TD

TB3-X: TX-, TX+, RX-, RX+, GND; +12VDC1, 12GND1

BELDEN 9502

RS422 COMJ1

DFLXJ1

1	RED
2	BLK/RD
4	WHT
5	BLK/WHT
3	GND

BLACK ABS RACK
LOCATED INSIDE INSTRUMENT

COMJ2

FLEXURE CONTROLLER — A, B, C, D

VACUUM GAUGE 1
LONG CAMERA — E, F, G, H

VACUUM GAUGE 2
SHORT CAMERA — J, K, L, M

SPARES — N, P, R, Z; T, U, V, W; X, Y, Z, a; b, c

12GND4 — SHIELD

PT06A-16-26S(SR)
TOP OF RACK 2

24VDC CENTER TAPPED PWR SUPPLY

C115ACH1, C115ACN1

+24VDC, +12VDC, DCGND

+24VDC1, +24VDC2, +24VDC3, +24VDC4

+12VDC1, +12VDC2, +12VDC3, +12VDC4

DCGND1, DCGND2, DCGND3, DCGND4

J1 — DB9-F: +24VDC, DCGND, +12VDC

POWER SUPPLY MONITOR

Carnegie Institution of Washington
The Observatories
813 Santa Barbara Street
Pasadena, California 91101
PHONE (818) 577-1122 FAX (818) 795-8136

IMACS

Title: IMACS RS-422 Communications

Size: C | Scale: | Drawn By: A. BAGISH | Revision:

Date: 8-Sep-2003 14:08:08 | Checked By: | Sheet 65 of 90

File: C:\OCIW\Imacs 16 Aug 03\Motion Control Systems\IMACS Motion Control July 16 2003.DDB - Documents\RS-422 Communications.Sch

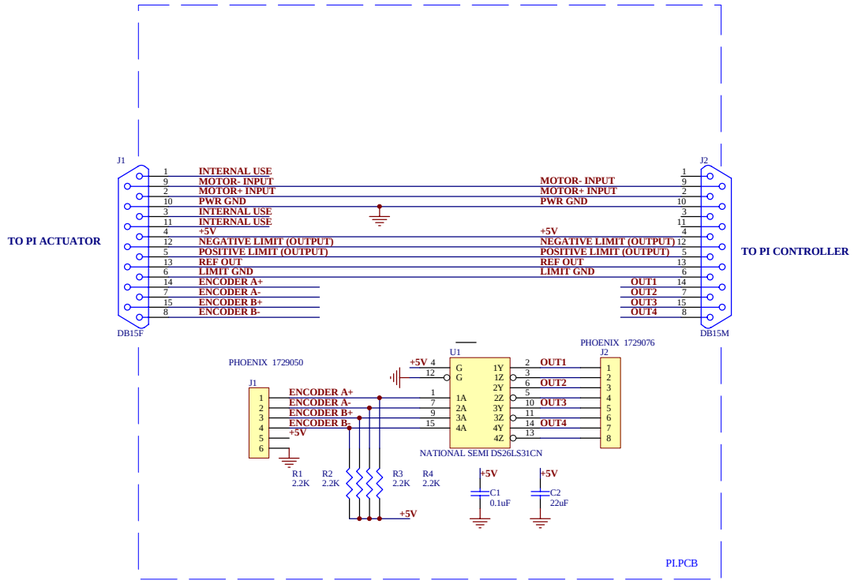

Carnegie Institution of Washington	
The Observatories 813 Santa Barbara Street Pasadena, California 91101 PHONE (818) 577-1122 FAX (818) 795-8136	
IMACS	
Title: PI ENCODER REPEATER CHASSIS	
Size: C	Scale:
Drawn By: A. BAGISH	Revision:
Checked By:	Sheet 67 of 90
Date: 8-Sep-2003 14:08:09	
File: C:\OCIW\Imacs 16 Aug 03\Motion Control Systems\IMACS Motion Control July 16 2003.DDB - Documents\PI line driver overall.sch	

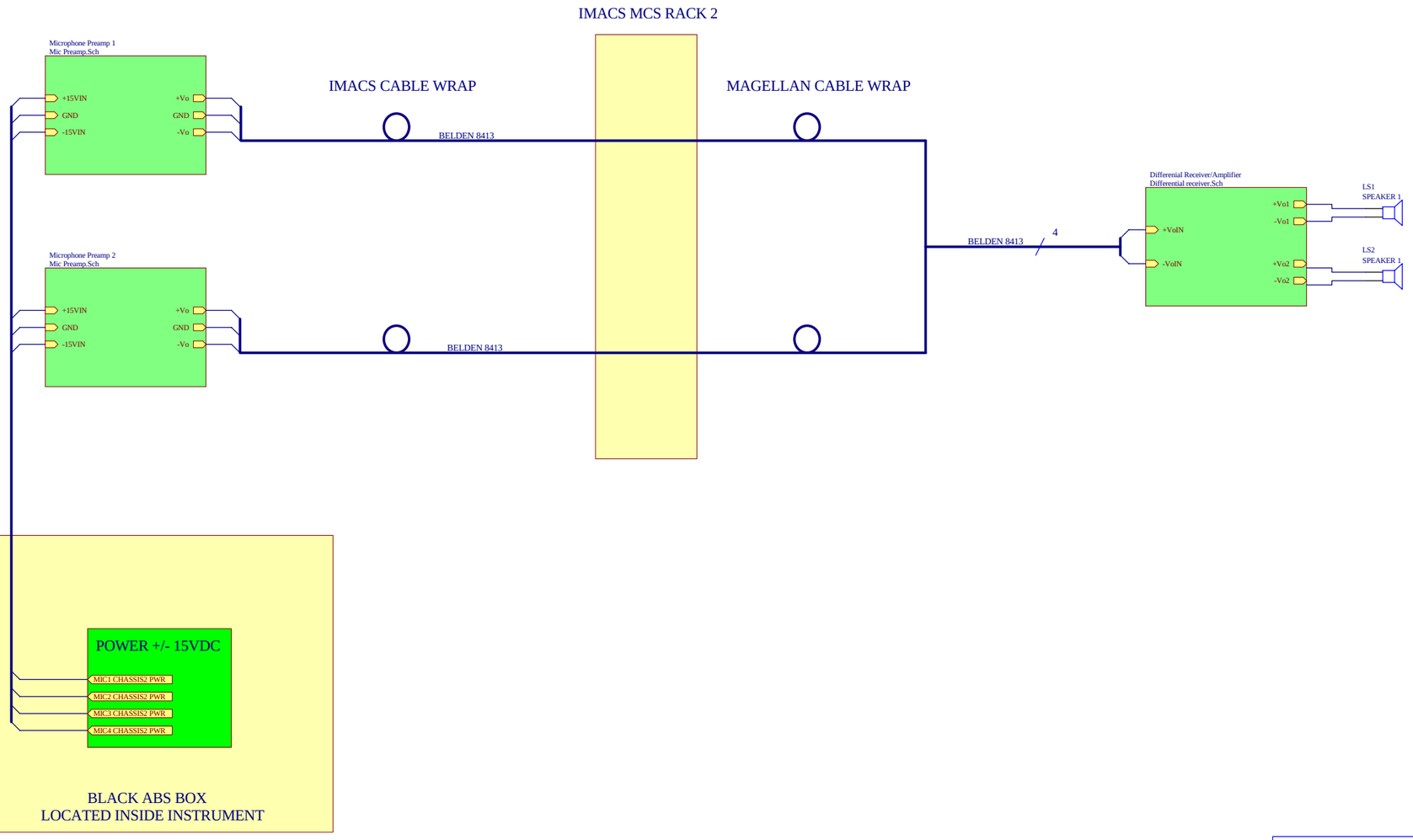

Microphone Cables
MIC Cable Layout.Sch

Carnegie Institution of Washington
The Observatories
813 Santa Barbara Street
Pasadena, California 91101
PHONE (818) 577-1122 FAX (818) 795-8136

IMACS

Title: IMACS AUDIO BLOCK DIAGRAM

Size: C	Scale:	Drawn By: A. BAGISH	Revision:
Date: 8-Sep-2003 14:08:09		Checked By:	Sheet 68 of 90

File: C:\OCIW\Imacs 16 Aug 03\Motion Control System\IMACS Motion Control July 16 2003.DDB - Documents\Audio Block Diagram.Sch

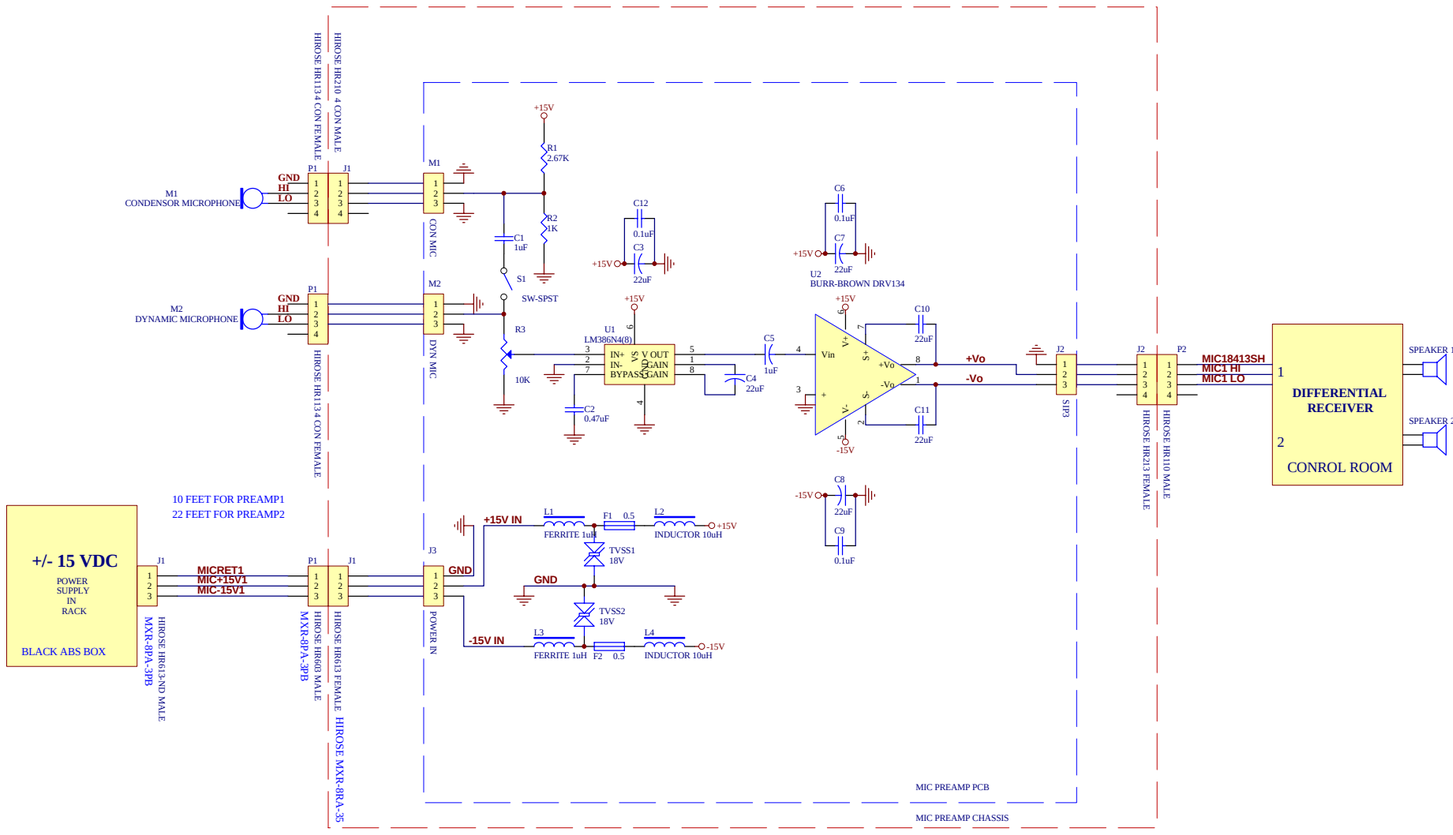

Mic Preamp.Sch

Carnegie Institution of Washington
The Observatories
813 Santa Barbara Street
Pasadena, California 91101
PHONE (818) 577-1122 FAX (818) 795-8136

IMACS

Title: MIC PREAMP

Size: C	Scale:	Drawn By: A. BAGISH	Revision:
Date: 8-Sep-2003 14:08:09		Checked By:	Sheet 69 of 90

File: C:\OCIW\Imacs 16 Aug 03\Motion Control System\IMACS Motion Control July 16 2003.DDB - Documents\Mic Preamp.Sch

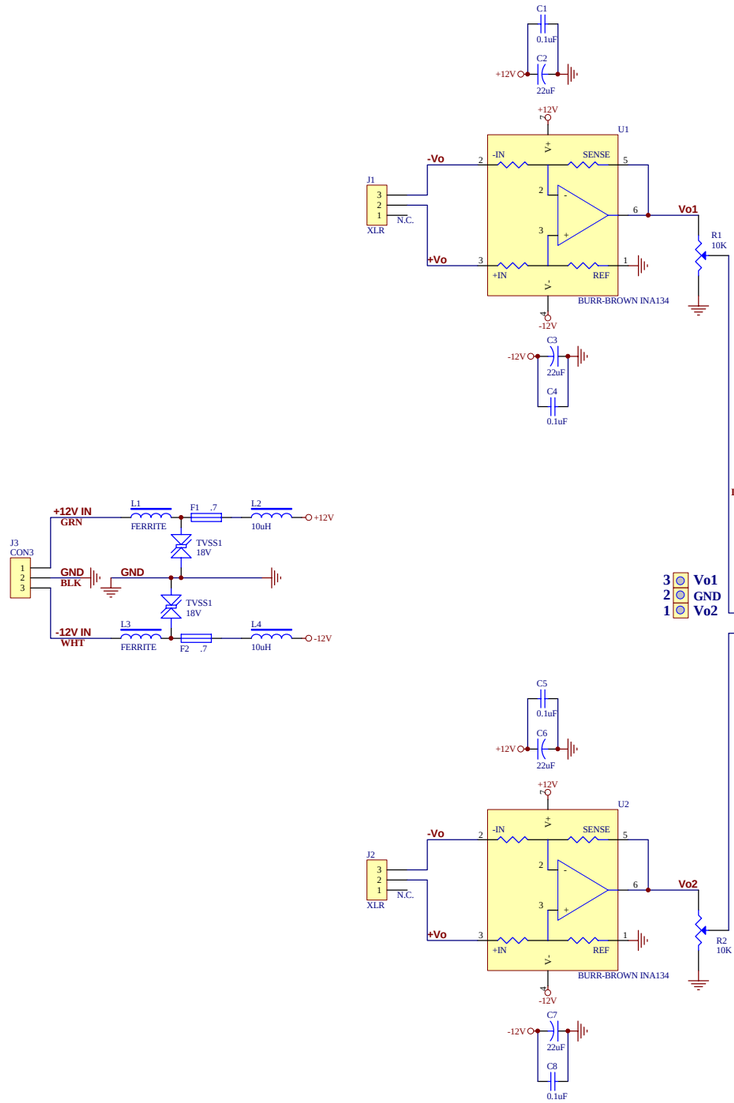

Carnegie Institution of Washington

The Observatories
813 Santa Barbara Street
Pasadena, California 91101
PHONE (818) 577-1122 FAX (818) 795-8136

IMACS

Title: DIFFERENTIAL RECEIVER

Size: C	Scale:	Drawn By: A. BAGISH	Revision:
Date: 6-Sep-2003 14:08:10		Checked By:	Sheet 70 of 90

File: C:\OCIW\Imacs 16 Aug 03\Motion Control System\IMACS Motion Control July 16 2003.DDB - Documents\Differential receiver.Sch

C:\OCIW\Imacs 16 Aug 03\Motion Control System\IMACS Motion Control July 16 2003.DDB - Documents\Differential receiver.Sch

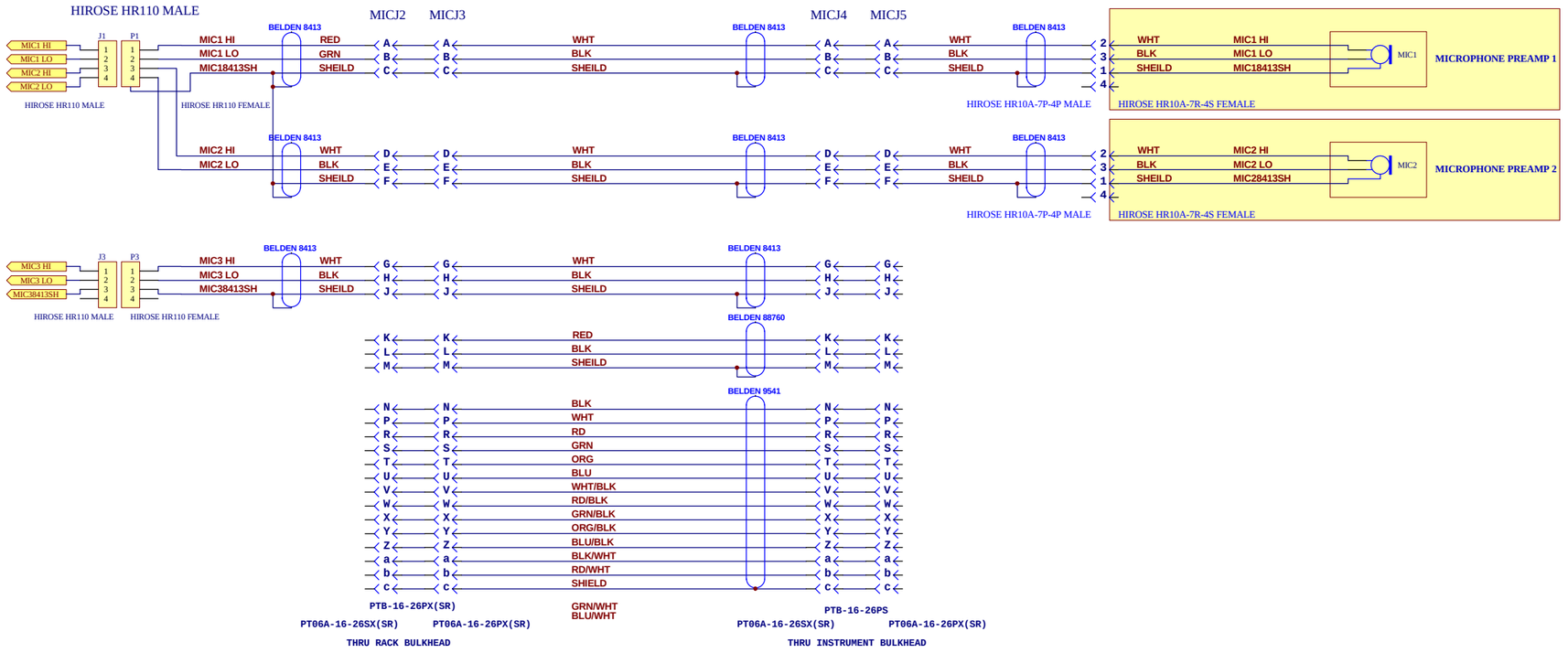

Carnegie Institution of Washington
The Observatories
813 Santa Barbara Street
Pasadena, California 91101
PHONE (818) 577-1122 FAX (818) 795-8136

IMACS

Title: MIC CABLE LAYOUT

Size: C	Scale:	Drawn By: A. BAGISH	Revision:
Date: 8-Sep-2003 14:08:10		Checked By:	Sheet 71 of 90

File: C:\OCIW\Imacs 16 Aug 03\Motion Control System\IMACS Motion Control July 16 2003.DDB - Documents\MIC Cable Layout.Sch

C:\OCIW\Imacs 16 Aug 03\Motion Control System\IMACS Motion Control July 16 2003.DDB - Documents\MIC Cable Layout.Sch

Required Modifications for Mycom PPC-2410
4-Axis PC Bus Controller Boards

AS SUPPLIED:

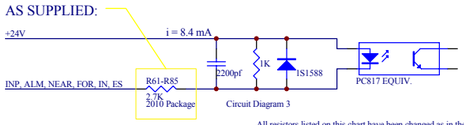

MODIFIED:

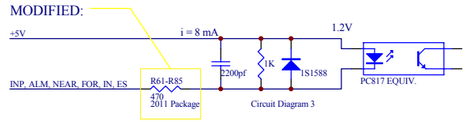

All resistors listed on this chart have been changed as in the above diagrams.

RESISTOR #:	PIN#:	SIGNAL NAME:
61	8	Axis A In Position
62	9	Alarm
63	10	Near Home
64	11	Forward Limit
65	12	Reverse Limit
66	13	General Purpose Input
67	27	Axis B In Position
68	28	Alarm
69	29	Near Home
70	30	Forward Limit
71	31	Reverse Limit
72	32	General Purpose Input

RESISTOR #:	PIN#:	SIGNAL NAME:
73	46	Axis C In Position
74	47	Alarm
75	48	Near Home
76	49	Forward Limit
77	50	Reverse Limit
78	51	General Purpose Input
79	65	Axis D In Position
80	66	Alarm
81	67	Near Home
82	68	Forward Limit
83	69	Reverse Limit
84	70	General Purpose Input
85	77	Emergency Stop Signal

AS SUPPLIED:

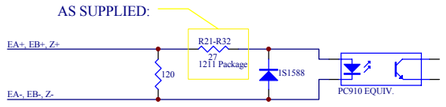

MODIFIED:

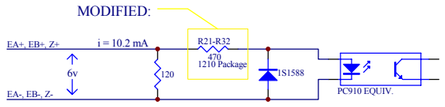

All resistors listed on this chart have been changed as in the above diagrams.

RESISTOR #:	PIN#:	SIGNAL NAME:
21	14	Axis A A-Phase Signal+
22	16	B-Phase Signal+
23	18	Z-Phase Signal+
24	33	Axis B A-Phase Signal+
25	35	B-Phase Signal+
26	37	Z-Phase Signal+
27	52	Axis C A-Phase Signal+
28	54	B-Phase Signal+
29	56	Z-Phase Signal+
30	71	Axis D A-Phase Signal+
31	73	B-Phase Signal+
32	75	Z-Phase Signal+

MODIFIED 1/23/2002 A. BAGISH

Carnegie Institution of Washington
The Observatories
813 Santa Barbara Street
Pasadena, California 91101
PHONE (818) 577-1122 FAX (818) 795-8136

IMACS

Title: Mycom PPC-2410 Modifications

Size: C	Scale:	Drawn By: A. BAGISH	Revision:
Date: 23-Jul-2003 22:37:30		Checked By:	Sheet 0 of 0

File: C:\OCIW\IMACS\Motion Control System\IMACS Motion Control July 16 2003.DDB - Documents\Mycom PPC-2410 MODS.sch

BACK

	PARALLEL IO SIGNALS	CI0-DUAL-AC5 #1 ADDRESS 300-307	MODE 0 CONTROL REGISTERS: 303H=98H 307H=93H				**IMACS OPTO 22 Memory Mapping July 21 2003**		**73**
Drives Opto22 Module Racks A, B & C in Control Chassis 1		**DIP SWITCH = 0011111**							
DIO #1									
RACK	CONNECTOR	PORT	ADDRESS	TYPE	ACTIVE LEVEL AT COMPUTER	MNEMONIC	DESCRIPTION	MODULE	
MR1A	P1	A0	300H	INPUT	LO	FS1 ELA/	Filter Server 1 Extend Limit A (active LO)	SNAP-IDC5	
MR1A	P1	AI	300H	INPUT	LO	FS1 ELB/	Filter Server 1 Extend Limit B (active LO)	SNAP-IDC5	
MR1A	P1	A2	300H	INPUT	LO	FS1RLA/	Filter Server 1 Retract Limit A (active LO)	SNAP-IDC5	
MR1A	P1	A3	300H	INPUT	LO	FS1RLB/	Filter Server I Retract Limit B (active LO)	SNAP-IDC5	
MR1A	P1	A4	300H	INPUT	LO	FS1CWHS/	Filter Server 1 ClockWise Hard Stop (active LO)	SNAP-IDC5	
MR1A	P1	A5	300H	INPUT	LO	FS1CCWHS/	Filter Server 1 Counter ClockWise Hard Stop (active LO)	SNAP-IDC5	
MR1A	P1	A6	300H	INPUT	LO	MSTEL/	Mask Server Transfer Extend Limit active LO	SNAP-IDC5	
MR1A	P1	A7	300H	INPUT	LO	MSTRL/	Mask Server Transfer Retract Limit (active LO)	SNAP-IDC5	
MR1A	P1	B0	301H	OUTPUT	LO	MSBRAKE(-)2/	Mask Server BRAKE active LO	SNAP-ODC5SNK	
MR1A	P1	B1	301H	OUTPUT	LO	FS1 BRAKE(-)2/	Filter Server 1 BRAKE (active LO)	SNAP-ODC5SNK	
MR1A	P1	B2	301H	OUTPUT	LO	FS2BRAKE(-)2/	Filter Server 2 BRAKE (active LO)	SNAP-ODC5SNK	
MR1A	P1	B3	301H	OUTPUT	LO	CFBRAKE(-)2/	Center Field BRAKE (active LO)	SNAP-ODC5SNK	
MR1A	P1	B4	301H	OUTPUT	LO	FS1SVR	Filter Server 1 Solenoid Valve Retract (active HI, momentary)	SNAP-ODC5SRC	
MR1A	P1	B5	301H	OUTPUT	LO	FSISVE	Filter Server 1 Solenoid Valve Extend (active HI, momentary)	SNAP-ODC5SRC	
MR1A	P1	B6	301H	OUTPUT	LO	MSTVE	Mask Server Transfer Valve Retract active HI momentary	SNAP-ODC5SRC	
MR1A	P1	B7	301H	OUTPUT	LO	MSTVR	Mask Server Transfer Valve Extend active HI.momentary	SNAP-ODC5SRC	
MR1A	P1	C0	302H	OUTPUT	LO	MSLVE	Mask Server Latch Valve Retract (active HI,momentary)	SNAP-ODC5SRC	
MR1A	P1	C1	302H	OUTPUT	LO	MSLVR	Mask Server Latch Valve Extend active HI.momentary	SNAP-ODC5SRC	
MR1A	P1	C2	302H	OUTPUT	LO	FS2SVR	Filter Server 2 Solenoid Valve Retract (active HI, momentary)	SNAP-ODC5SRC	
MR1A	P1	C3	302H	OUTPUT	LO	FS2SVE	Filter Server 2 Solenoid Valve Extend active HI, momenta	SNAP-ODC5SRC	
MR1A	P1	C4	302H	INPUT	LO	MSLRL/	Mask Server Latch Extend Limit (active LO)	SNAP-IDC5	
MR1A	P1	C5	302H	INPUT	LO	MSLEL/	Mask Server Latch Retract Limit (active LO)	SNAP-IDC5	
MR1A	P1	C6	302H	INPUT	LO	MSCWHS/	Mask Server ClockWise Hard Stop (active LO)	SNAP-IDC5	
MR1A	P1	C7	302H	INPUT	LO	MSCCWHS/	Mask Server Counter ClockWise Hard Stop (active LO)	SNAP-IDC5	
MR1B	P2	A0	304H	INPUT	LO	MSPSW1	Mask Server Proximity Switch I (active LO)	SNAP-IDC5	
MR1B	P2	A1	304H	INPUT	LO	MSPSW2	Mask Server Proximity Switch 2 active LO	SNAP-IDC5	
MR1B	P2	A2	304H	INPUT	LO	MSPSW3	Mask Server Proximity Switch 3 active LO	SNAP-IDC5	
MR1B	P2	A3	304H	INPUT	LO	MSPSW4	Mask Server Proximity Switch 4 active LO	SNAP-IDC5	
MR1B	P2	A4	304H	INPUT	LO	MSPSW5	Mask Server Proximity Switch 5 active LO	SNAP-IDC5	
MR1B	P2	A5	304H	INPUT	LO	MSPSW6	Mask Server Proximity Switch 6 active LO	SNAP-IDC5	
MR1B	P2	A6	304H	INPUT	LO	MSPSW7	Mask Server Proximity Switch 7 active LO	SNAP-IDC5	
MR1B	P2	A7	304H	INPUT	LO	MSPSW8	Mask Server Proximity Switch 8 active LO	SNAP-IDC5	
MR1B	P2	B0	305H	INPUT	LO	FS2RLA/	Filter Server 2 Retract Limit A (active LO)	SNAP-IDC5	
MR1B	P2	B1	305H	INPUT	LO	FS2ELA/	Filter Server 2 Extend Limit A (active LO)	SNAP-IDC5	
MR1B	P2	B2	305H	INPUT	LO	FS2ELB/	Filter Server 2 Extend Limit B (active LO)	SNAP-IDC5	
MR1B	P2	B3	305H	INPUT	LO	FS2RLB/	Filter Server 2 Retract Limit B (active LO)	SNAP-IDC5	
MR1B	P2	B4	305H	INPUT	LO	FS2CWHS/	Filter Server 2 ClockWise Hard Stop (active LO)	SNAP-IDC5	
MR1B	P2	B5	305H	INPUT	LO	FS2CCWHS/	Filter Server 2 CounterClockWise Hard Stop (active LO)	SNAP-IDC5	
MR1B	P2	B6	305H	INPUT	LO	CFCWHS/	Center Field ClockWise Hard Stop (active LO)	SNAP-IDC5	
MR1B	P2	B7	305H	INPUT	LO	CFCCWHS/	Center Field CounterClockWise Hard Stop (active LO)	SNAP-IDC5	
MR1B	P2	C0	306H	INPUT	LO	CFLEL/	Center Field Lens Extend Limit (active LO)	SNAP-IDC5	
MR1B	P2	C1	306H	INPUT	LO	CFLRL/	Center Field Lens Retract Limit (active LO)	SNAP-IDC5	
MR1B	P2	C2	306H	INPUT	LO	CFFEL/	Center Field Filter Extend Limit (active LO)	SNAP-IDC5	
MR1B	P2	C3	306H	INPUT	LO	CFFRL/	Center Field Filter Retract Limit (active LO)	SNAP-IDC5	
MR1B	P2	C4	306H	OUTPUT	LO	CFLSVE	Center Field Lens Solenoid Valve Extend (active HI, momentary)	SNAP-ODC5SRC	
MR1B	P2	C5	306H	OUTPUT	LO	CFLSVR	Center Field Lens Solenoid Valve Retract (active HI. momentary)	SNAP-ODC5SRC	
MR1B	P2	C6	306H	OUTPUT	LO	CFFSVE	Center Field Filter Solenoid Valve Extend (active HI, momentary)	SNAP-ODC5SRC	
MR1B	P2	C7	306H	OUTPUT	LO	CFFSVR	Center Field Filter Solenoid Valve Retract (active HI, momentary)	SNAP-ODC5SRC	

BACK

DIO #2		CI0-DUAL-AC5 #2 ADDRESS 308H -30FH	MODE 0 CONTROL REGISTERS: 30BH=90H 30FH=80H						
		DIP SWITCH = 0011110							
RACK	CONNECTOR	PORT	ADDRESS 308H - 30FH	TYPE	ACTIVE LEVEL AT COMPUTER	MNEMONIC	DESCRIPTION	MODULE	
MR1C	P1	A0	308H	INPUT	LO	MSIPSW9	Mask Installed Sensor	SNAP-IDC5	
MR1C	P1	AI	308H	INPUT	LO		SPARE	SNAP-IDC5	
MR1C	P1	A2	308H	INPUT	LO		SPARE	SNAP-IDC5	
MR1C	P1	A3	308H	INPUT	LO		SPARE	SNAP-IDC5	
MR1C	P1	A4	308H	INPUT	LO		AVAILABLE		
MR1C	P1	A5	308H	INPUT	LO		AVAILABLE		
MR1C	P1	A6	308H	INPUT	LO		AVAILABLE		
MR1C	P1	A7	308H	INPUT	LO		AVAILABLE		
MR1C	P1	B0	309H	OUTPUT	LO	FS1E5V	Filter Server 1 Encoder Power	SNAP-ODCR	
MR1C	P1	B1	309H	OUTPUT	LO	FS2E5V	Filter Server 2 Encoder Power	SNAP-ODCR	
MR1C	P1	B2	309H	OUTPUT	LO	MSE5V	Mask Server Encoder Power	SNAP-ODCR	
MR1C	P1	B3	309H	OUTPUT	LO		AVAILABLE	SNAP-ODCR	
MR1C	P1	B4	309H	OUTPUT	LO		AVAILABLE		
MR1C	P1	B5	309H	OUTPUT	LO		AVAILABLE		
MR1C	P1	B6	309H	OUTPUT	LO		AVAILABLE		
MR1C	P1	B7	309H	OUTPUT	LO		AVAILABLE		
MR1C	P1	C0	30AH	OUTPUT	LO		AVAILABLE		
MR1C	P1	C1	30AH	OUTPUT	LO		AVAILABLE		
MR1C	P1	C2	30AH	OUTPUT	LO		AVAILABLE		
MR1C	P1	C3	30AH	OUTPUT	LO		AVAILABLE		
MR1C	P1	C4	30AH	OUTPUT	LO		AVAILABLE		
MR1C	P1	C5	30AH	OUTPUT	LO		AVAILABLE		
MR1C	P1	C6	30AH	OUTPUT	LO		AVAILABLE		
MR1C	P1	C7	30AH	OUTPUT	LO		AVAILABLE		
	P2	A0	30CH	OUTPUT	LO		AVAILABLE		
	P2	A1	30CH	OUTPUT	LO		AVAILABLE		
	P2	A2	30CH	OUTPUT	LO		AVAILABLE		
	P2	A3	30CH	OUTPUT	LO		AVAILABLE		
	P2	A4	30CH	OUTPUT	LO		AVAILABLE		
	P2	A5	30CH	OUTPUT	LO		AVAILABLE		
	P2	A6	30CH	OUTPUT	LO		AVAILABLE		
	P2	A7	30CH	OUTPUT	LO		AVAILABLE		
	P2	B0	30DH	OUTPUT	LO		AVAILABLE		
	P2	B1	30DH	OUTPUT	LO		AVAILABLE		
	P2	B2	30DH	OUTPUT	LO		AVAILABLE		
	P2	B3	30DH	OUTPUT	LO		AVAILABLE		
	P2	B4	30DH	OUTPUT	LO		AVAILABLE		
	P2	B5	30DH	OUTPUT	LO		AVAILABLE		
	P2	B6	30DH	OUTPUT	LO		AVAILABLE		
	P2	B7	30DH	OUTPUT	LO		AVAILABLE		
	P2	C0	30EH	OUTPUT	LO		AVAILABLE		
	P2	C1	30EH	OUTPUT	LO		AVAILABLE		
	P2	C2	30EH	OUTPUT	LO		AVAILABLE		
	P2	C3	30EH	OUTPUT	LO		AVAILABLE		
	P2	C4	30EH	OUTPUT	LO		AVAILABLE		
	P2	C5	30EH	OUTPUT	LO		AVAILABLE		
	P2	C6	30EH	OUTPUT	LO		AVAILABLE		
	P2	C7	30EH	OUTPUT	LO				

BACK

	PARALLEL IO SIGNALS	CI0-DUAL-AC5 #3 ADDRESS 310-317 H	MODE 0 CONTROL REGISTERS 313 H=91 H 317H= 80 H						
Drives Opto22 Module Racks A,	B in Control Chassis 2	**DIP SWITCH = 0011101**							
DIO #3									
RACK	CONNECTOR	PORT	ADDRESS	TYPE	ACTIVE LEVEL AT COMPUTER	MNEMONIC	DESCRIPTION	MODULE	
MR2A	P1	A0	310 H	INPUT	LO	SHFRL/	Shack-Hartmann Filter Retract Limit active LO	SNAP-IDC5	
MR2A	P1	AI	310 H	INPUT	LO	SHFEL/	Shack-Hartmann Filter Extend Limit active L0	SNAP-IDC5	
MR2A	P1	A2	310 H	INPUT	LO	SHLRL/	Shack-Hartmann Lens Retract Limit active L0	SNAP-IDC5	
MR2A	P1	A3	310 H	INPUT	LO	SHLEL/	Shack-Hartmann Lens Extend Limit active L0	SNAP-IDC5	
MR2A	Pt	A4	310 H	INPUT	LO	SHTCWHS/	Shack-Hartmann Theta ClockWise Hard St active LO	SNAP-IDC5	
MR2A	P1	A5	310 H	INPUT	LO	SHTCCWHS/	Shack-Hartmann Theta CounterClockWise Hard Stop active LO	SNAP-IDC5	
MR2A	P1	A6 NOT USED TIE TO GROUNF	310 H	INPUT	LO	SHRCWHS/	Shack-Hartmann Radial ClockWise Hard Stop active LO	SNAP-IDC5	
MR2A	P1	A7 NOT USED	310 H	INPUT	LO	SHRCCWHS/	Shack-Hartmann Radial CounterClockWise Hard Sto active LO	SNAP-IDC5	
MR2A	P1	B0	311H	OUTPUT	LO	SHTBRAKE(-)2/	Shack-Hartmann Theta BRAKE active LO	SNAP-ODC5SNK	
MR2A	P1	BI	311H	OUTPUT	LO	SHRBRAKE(-)2/	Shack-Hartmann Radial BRAKE active LO	SNAP-ODC5SNK	
MR2A	P1	B2	311H	OUTPUT	LO	PGBRAKE(-)2/	Principal Guider Brake	SNAP-ODC5SNK	
MR2A	P1	B3	311H	OUTPUT	LO		SPARE	SNAP-ODC5SNK	
MR2A	P1	B4	311H	OUTPUT	LO	SHFSVR	Shack-Hartmann Filter Retract active HI, momentary	SNAP-ODC5SRC	
MR2A	P1	B5	311H	OUTPUT	LO	SHFSVE	Shack-Hartmann Filter Extend active HI momentary	SNAP-ODC5SRC	
MR2A	P1	B6	311H	OUTPUT	LO	SHLSVR	Shack-Hartrrrann Lens Retract active HI, momentary	SNAP-ODC5SRC	
MR2A	P1	B7	311H	OUTPUT	LO	SHLSVE	Shack-Hartmann Lens Extend active HI, momentary	SNAP-ODC5SRC	
MR2A	P1	C0	312H	INPUT	LO	PGEL/	Principal Guider Extend Limit	SNAP-IDC5	
MR2A	P1	CI	312H	INPUT	LO	PGRL/	Principal Guider Retract Limit	SNAP-IDC5	
MR2A	P1	C2	312H	INPUT	LO	PGCWHS/	Principal Guider ClockWise Hard Stop	SNAP-IDC5	
MR2A	P1	C3	312H	INPUT	LO	PGCCWHS/	Principal Guider Counter-ClockWise Hard Stop	SNAP-IDC5	
MR2A	P1	C4	312H	OUTPUT	LO	PGSVE	Principal Guider Solenoid Valve Extend	SNAP-ODC5SRC	
MR2A	P1	C5	312H	OUTPUT	LO	PGSVR	Principal Guider Solenoid Valve Retract	SNAP-ODC5SRC	
MR2A	P1	C6	312H	OUTPUT	LO		SPARE	SNAP-ODC5SRC	
MR2A	P1	C7	312H	OUTPUT	LO		SPARE	SNAP-ODC5SRC	
MR2B	P2	A0	314H	OUTPUT	LO	SHRE5V	Shack-Hartmann Radial Encoder Power	SNAP-ODCR	
MR2B	P2	AI	314H	OUTPUT	LO		AVAILABLE	SNAP-ODCR	
MR2B	P2	A2	314H	OUTPUT	LO		AVAILABLE	SNAP-ODCR	
MR2B	P2	A3	314H	OUTPUT	LO		AVAILABLE	SNAP-ODCR	
MR2B	P2	A4	314H	OUTPUT	LO		AVAILABLE		
MR2B	P2	A5	314H	OUTPUT	LO		AVAILABLE		
MR2B	P2	A6	314H	OUTPUT	LO		AVAILABLE		
MR2B	P2	A7	314H	OUTPUT	LO		AVAILABLE		
MR2B	P2	B0	315H	OUTPUT	LO		AVAILABLE		
MR2B	P2	BI	315H	OUTPUT	LO		AVAILABLE		
MR2B	P2	B2	315H	OUTPUT	LO		AVAILABLE		
MR2B	P2	B3	315H	OUTPUT	LO		AVAILABLE		
MR2B	P2	B4	315H	OUTPUT	LO		AVAILABLE		
MR2B	P2	B5	315H	OUTPUT	LO		AVAILABLE		
MR2B	P2	B6	315H	OUTPUT	LO		AVAILABLE		
MR2B	P2	B7	315H	OUTPUT	LO		AVAILABLE		
MR2B	P2	C0	316H	OUTPUT	LO		AVAILABLE		
MR2B	P2	CI	316H	OUTPUT	LO		AVAILABLE		
MR2B	P2	C2	316H	OUTPUT	LO		AVAILABLE		
MR2B	P2	C3	316H	OUTPUT	LO		AVAILABLE		
MR2B	P2	C4	316H	OUTPUT	LO		AVAILABLE		
MR2B	P2	C5	316H	OUTPUT	LO		AVAILABLE		
MR2B	P2	C6	316H	OUTPUT	LO		AVAILABLE		
MR2B	P2	C7	316H	OUTPUT	LO		AVAILABLE		

BACK

	PARALLEL IO SIGNALS	CI0-DUAL-AC5 #4 ADDRESS 318-31F H	MODE 0 CONTROL REGISTERS 31B H=89 H 31F H= 92 H						
Drives Opto22 Module Racks A,	B in Control Chassis 3	**DIP SWITCH = 0011100**							
DIO #4									
RACK	CONNECTOR	PORT	ADDRESS	TYPE	ACTIVE LEVEL AT COMPUTER	MNEMONIC	DESCRIPTION		
MR3A	P1	A0	318 H	OUTPUT	LO	LAMP1	LAMP1	SNAP-OAC5	
MR3A	P1	AI	318 H	OUTPUT	LO	LAMP2	LAMP2	SNAP-OAC5	
MR3A	P1	A2	318 H	OUTPUT	LO	LAMP3	LAMP3	SNAP-OAC5	
MR3A	P1	A3	318 H	OUTPUT	LO	LAMP4	LAMP4	SNAP-OAC5	
MR3A	Pt	A4	318 H	OUTPUT	LO	LAMP5	LAMP5	SNAP-OAC5	
MR3A	P1	A5	318 H	OUTPUT	LO	SPARE	SPARE	SNAP-OAC5	
MR3A	P1	A6	318 H	OUTPUT	LO	HMOTOR	close	SNAP-OAC5	
MR3A	P1	A7	318 H	OUTPUT	LO	HMOTOR	open	SNAP-OAC5	
MR3A	P1	B0	319 H	OUTPUT	LO	DTAE5V	Disperser Tilt A Encoder Power	SNAP-ODCR	
MR3A	P1	BI	319 H	OUTPUT	LO	DTBE5V	Disperser Tilt B Encoder Power	SNAP-ODCR	
MR3A	P1	B2	319 H	OUTPUT	LO	DTCE5V	Disperser Tilt C Encoder Power	SNAP-ODCR	
MR3A	P1	B3	319 H	OUTPUT	LO	DCE5V	Disperser Carousel Encoder Power	SNAP-ODCR	
MR3A	P1	B4	319 H	OUTPUT	LO	LAMP6	D0	SNAP-ODC5SRC	
MR3A	P1	B5	319 H	OUTPUT	LO	LAMP6	D1	SNAP-ODC5SRC	
MR3A	P1	B6	319 H	OUTPUT	LO	LAMP6	D2	SNAP-ODC5SRC	
MR3A	P1	B7	319 H	OUTPUT	LO	LAMP6	D3	SNAP-ODC5SRC	
MR3A	P1	C0	31A H	INPUT	LO	DTACWHS/	Grating Tilt A ClockWise Hard Stop	SNAP-IDC5	
MR3A	P1	CI	31A H	INPUT	LO	DTACCWHS/	Grating Tilt A CounterClockWise Hard Stop	SNAP-IDC5	
MR3A	P1	C2	31A H	INPUT	LO	DTBCWHS/	Grating Tilt B ClockWise Hard Stop	SNAP-IDC5	
MR3A	P1	C3	31A H	INPUT	LO	DTBCCWHS/	Grating Tilt B Brake CounterClockWise Hard Stop	SNAP-IDC5	
MR3A	P1	C4	31A H	INPUT	LO	DTCCWHS/	Grating Tilt C ClockWise Hard Stop	SNAP-IDC5	
MR3A	P1	C5	31A H	INPUT	LO	DTBCCCWHS/	Grating Tilt C CounterClockWise Hard Stop	SNAP-IDC5	
MR3A	P1	C6	31A H	INPUT	LO	DCBR/	Disperser Carousel Brake Retract	SNAP-IDC5	
MR3A	P1	C7	31A H	INPUT	LO	DCBE/	Disperser Carousel Brake Extend	SNAP-IDC5	
MR3B	P2	A0	31C H	INPUT	LO	DCPSW1	Disperser Carousel GRATING TILT A (GTA)	SNAP-IDC5	
MR3B	P2	AI	31C H	INPUT	LO	DCPSW2	Disperser Carousel MIRROR (M)	SNAP-IDC5	
MR3B	P2	A2	31C H	INPUT	LO	DCPSW3	Disperser Carousel GRATING TILT B (GTB)	SNAP-IDC5	
MR3B	P2	A3	31C H	INPUT	LO	DCPSW4	Disperser Carousel GZ	SNAP-IDC5	
MR3B	P2	A4	31C H	INPUT	LO	DCPSW5	Disperser Carousel GRATING TILT C (GTB)	SNAP-IDC5	
MR3B	P2	A5	31C H	INPUT	LO	DCPSW6	Disperser Carousel GZ	SNAP-IDC5	
MR3B	P2	A6	31C H	INPUT	LO	DCCWHS/	Disperser Carousel ClockWise Hard Stop	SNAP-IDC5	
MR3B	P2	A7	31C H	INPUT	LO	DCCCWHS/	Disperser Carousel CounterClockWise Hard Stop	SNAP-IDC5	
MR3B	P2	B0	31D H	INPUT	LO	DCARLA/	Disperser Clamp A Retract	SNAP-IDC5	
MR3B	P2	BI	31D H	INPUT	LO	DCAELA/	Disperser Clamp A Extend	SNAP-IDC5	
MR3B	P2	B2	31D H	INPUT	LO	DCARLB/	Disperser Clamp B Retract	SNAP-IDC5	
MR3B	P2	B3	31D H	INPUT	LO	DCAELB/	Disperser Clamp B Extend	SNAP-IDC5	
MR3B	P2	B4	31D H	INPUT	LO	DCARLC/	Disperser Clamp C Retract	SNAP-IDC5	
MR3B	P2	B5	31D H	INPUT	LO	DCAELC/	Disperser Clamp C Extend	SNAP-IDC5	
MR3B	P2	B6	31D H	INPUT	LO	DCARLD/	Disperser Clamp D Retract	SNAP-IDC5	
MR3B	P2	B7	31D H	INPUT	LO	DCAELD/	Disperser Clamp D Extend	SNAP-IDC5	
MR3B	P2	C0	31E H	OUTPUT	LO	DCBRAKE(-)2	Disperser Carousel Brake (Motor)	SNAP-ODC5SNK	
MR3B	P2	CI	31E H	OUTPUT	LO	SPARE	SPARE	SNAP-ODC5SNK	
MR3B	P2	C2	31E H	OUTPUT	LO	SPARE	SPARE	SNAP-ODC5SNK	
MR3B	P2	C3	31E H	OUTPUT	LO	SPARE	SPARE	SNAP-ODC5SNK	
MR3B	P2	C4	31E H	OUTPUT	LO	DCASVR	Disperser Clamp Solenoid Valve Retract	SNAP-ODC5SRC	
MR3B	P2	C5	31E H	OUTPUT	LO	DCASVE	Disperser Clamp Solenoid Valve Extend	SNAP-ODC5SRC	
MR3B	P2	C6	31E H	OUTPUT	LO	DCBSR/	Disperser Carousel Brake Solenoid Retract	SNAP-ODC5SRC	
MR3B	P2	C7	31E H	OUTPUT	LO	DCBSE/	Disperser Carousel Brake Solenoid Extend	SNAP-ODC5SRC	

BACK

	PARALLEL IO SIGNALS	CI0-DUAL-AC5 #5 ADDRESS 320 - 327 H	MODE 0 CONTROL REGISTERS 323 H=90 H 327 H= 80 H						
Drives Opto22 Module Racks A in Control Chassis 4		**DIP SWITCH = 0011011**							
DIO#5									
RACK	CONNECTOR	PORT	ADDRESS	TYPE	ACTIVE LEVEL AT COMPUTER		DESCRIPTION		
MR4A	P1	A0	320H	INPUT	LO	LDFCWHS/	Long Detector Focus ClockWise Hard Stop	SNAP-IDC5	
MR4A	P1	AI	320H	INPUT	LO	LDFCCWHS/	Long Detector Focus Counter-ClockWise Hard Stop	SNAP-IDC5	
MR4A	P1	A2	320H	INPUT	LO	SDFCWHS/	Short Detector Focus ClockWise Hard Stop	SNAP-IDC5	
MR4A	P1	A3	320H	INPUT	LO	SDFCCWHS/	Short Detector Focus Counter-ClockWise Hard Stop	SNAP-IDC5	
MR4A	Pt	A4	320H	INPUT	LO		AVAILABLE		
MR4A	P1	A5	320H	INPUT	LO		AVAILABLE		
MR4A	P1	A6	320H	INPUT	LO		AVAILABLE		
MR4A	P1	A7	320H	INPUT	LO		AVAILABLE		
MR4A	P1	B0	321H	OUTPUT	LO	LDFBRAKE(-)2	Long Detector Focus Brake NOT USED	SNAP-ODC5SNK	
MR4A	P1	BI	321H	OUTPUT	LO	SDFBRAKE(-)2	Short Detector Focus Brake NOT USED	SNAP-ODC5SNK	
MR4A	P1	B2	321H	OUTPUT	LO		SPARE	SNAP-ODC5SNK	
MR4A	P1	B3	321H	OUTPUT	LO		SPARE	SNAP-ODC5SNK	
MR4A	P1	B4	322H	OUTPUT	LO		AVAILABLE		
MR4A	P1	B5	322H	OUTPUT	LO		AVAILABLE		
MR4A	P1	B6	322H	OUTPUT	LO		AVAILABLE		
MR4A	P1	B7	322H	OUTPUT	LO		AVAILABLE		
MR4A	P1	C0	321H	OUTPUT	LO		AVAILABLE		
MR4A	P1	CI	321H	OUTPUT	LO		AVAILABLE		
MR4A	P1	C2	321H	OUTPUT	LO		AVAILABLE		
MR4A	P1	C3	321H	OUTPUT	LO		AVAILABLE		
MR4A	P1	C4	322H	OUTPUT	LO		AVAILABLE		
MR4A	P1	C5	322H	OUTPUT	LO		AVAILABLE		
MR4A	P1	C6	322H	OUTPUT	LO		AVAILABLE		
MR4A	P1	C7	322H	OUTPUT	LO		AVAILABLE		
MR4B	P2	A0	324H	OUTPUT	LO		AVAILABLE		
MR4B	P2	AI	324H	OUTPUT	LO		AVAILABLE		
MR4B	P2	A2	324H	OUTPUT	LO		AVAILABLE		
MR4B	P2	A3	324H	OUTPUT	LO		AVAILABLE		
MR4B	P2	A4	324H	OUTPUT	LO		AVAILABLE		
MR4B	P2	A5	324H	OUTPUT	LO		AVAILABLE		
MR4B	P2	A6	324H	OUTPUT	LO		AVAILABLE		
MR4B	P2	A7	324H	OUTPUT	LO		AVAILABLE		
MR4B	P2	B0	325H	OUTPUT	LO		AVAILABLE		
MR4B	P2	BI	325H	OUTPUT	LO		AVAILABLE		
MR4B	P2	B2	325H	OUTPUT	LO		AVAILABLE		
MR4B	P2	B3	325H	OUTPUT	LO		AVAILABLE		
MR4B	P2	B4	325H	OUTPUT	LO		AVAILABLE		
MR4B	P2	B5	325H	OUTPUT	LO		AVAILABLE		
MR4B	P2	B6	325H	OUTPUT	LO		AVAILABLE		
MR4B	P2	B7	325H	OUTPUT	LO		AVAILABLE		
MR4B	P2	C0	326H	OUTPUT	LO		AVAILABLE		
MR4B	P2	CI	326H	OUTPUT	LO		AVAILABLE		
MR4B	P2	C2	326H	OUTPUT	LO		AVAILABLE		
MR4B	P2	C3	326H	OUTPUT	LO		AVAILABLE		
MR4B	P2	C4	326H	OUTPUT	LO		AVAILABLE		
MR4B	P2	C5	326H	OUTPUT	LO		AVAILABLE		
MR4B	P2	C6	326H	OUTPUT	LO		AVAILABLE		
MR4B	P2	C7	326H	OUTPUT	LO		AVAILABLE		